Table of Contents

1. GENERAL 18

1.1 GENERAL REMARKS 18
1.1.1 ABBREVIATIONS 18
1.1.2 GENERAL NOTES 18
1.1.3 USE OF THESE GENERAL TECHNICAL REQUIREMENTS 18

1.2 DEFINITIONS 19
1.2.1 DEFINITION OF GENERAL TERMS 19
1.2.2 DEFINITIONS RELATED TO ROAD CLASSIFICATION 22
1.2.3 DEFINITIONS RELATED TO ROAD CONSTRUCTION 23

1.3 STANDARDS FOR MATERIALS, EQUIPMENT AND WORKS 25
1.3.1 STANDARDS AND TECHNICAL REGULATIONS 25
1.3.2 ALTERNATIVE MATERIALS AND EQUIPMENT 25

1.4 DESIGN DOCUMENTATION 25
1.4.1 PRELIMINARY DESIGN 25
1.4.2 FINAL DESIGN 26

1.5 PROVISIONAL BUILDING PERMIT 26

1.6 INVESTIGATION REPORT 27

1.7 BUILDING PERMIT 27

1.8 PROJECT MANAGER 28

1.9 SUPERVISING ENGINEER 28

1.10 WORKING DESIGNS AND WORKSHOP DRAWINGS 29

1.11 WORK SCHEDULE AND LIST OF EQUIPMENT 30

1.12 ALTERATIONS TO THE DESIGN, TYPE OF WORK AND QUANTITIES 30
1.12.1 ALTERATION OF THE DESIGN OR TYPE OF WORK 30
1.12.2 ALTERATION OF QUANTITIES 31

1.13 ADDITIONAL WORK 31

1.14 UNAUTHORIZED WORK 31

1.15 MEASUREMENT OF QUANTITIES 31

1.16 ON-SITE ESTABLISHMENT 32

1.17 MATERIALS AND PRODUCTS FOR CONSTRUCTION 32

1.18 STORAGE AND HANDLING OF MATERIALS 32

1.19 QUALITY ASSURANCE FOR MATERIALS, PRODUCTS AND WORKS 33
1.19.1 GENERAL 33
1.19.2 MATERIALS, PRODUCTS AND WORKS 33
1.19.3 LOAD TESTING 34
1.19.4 COSTS 34

1.20 CONSTRUCTION SITE FACILITIES 35
1.20.1 GENERAL 35
1.20.2 MATERIALS 35
1.20.3 PREPARATIONS 35
1.20.4 SITE BUILDINGS 35
1.20.5 ACCESS ROADS AND PARKING LOTS 36
1.20.6 UTILITY APPURTENANCES - ELECTRICITY 36
1.20.7 DAILY CLEANING AND PROTECTION 36
1.20.8 MAINTENANCE 37

1.21 PROJECT MANAGER'S AND SUPERVISING ENGINEER'S OFFICE 37

1.22 ONSITE FACILITIES FOR LABORATORY, EMPLOYER'S PERSONNEL AND SUPERVISING ENGINEERS 38

1.23 SURVEYING AND LABORATORY EQUIPMENT AND REQUIRED LABOUR 38
1.23.1 SURVEYING EQUIPMENT 38
1.23.2 LABORATORY EQUIPMENT 38
1.23.3 PROVISION OF GENERAL LABOR 38
1.23.4 MAINTENANCE OF SURVEYING AND LABORATORY EQUIPMENT 39

1.24 TEMPORARY TRAFFIC SIGNS 39

1.25 TRAFFIC CONTROL 39

1.26 MAINTENANCE OF EXISTING ROADS, SIDEWALKS AND BIKE PATHS 40

1.27 TEMPORARY DIVERSION OF TRAFFIC 42

1.28 INTERSECTION WITH OTHER ROADS, CROSSROADS AND PATHS 42

1.29 CONSTRUCTION ON ONE HALF OF THE ROAD PAVEMENT WIDTH 43

1.30 TEMPORARY STRUCTURES 43

1.31 ROAD TRAFFIC OPERATION AND PROTECTION 44

1.32 RIGHT-OF-WAY LIMITS 45

1.33 FINAL INSPECTION 45

1.34 BUILDING INSPECTION 46

1.35 TECHNICAL REGULATIONS 47

2. PRELIMINARY WORKS 50

2.1 GENERAL 50
2.1.1 DEFINITIONS 50
2.1.2 PREPARATIONS FOR CONSTRUCTION 50
2.1.3 SEQUENCE OF ACTIVITIES FOR PREPARATION OF THE CONSTRUCTION MANAGEMENT DESIGN 51

2.2 TOPOGRAPHIC SURVEY 53
2.2.1 STAKEOUT OF THE ROUTE AND STRUCTURES 53
2.2.2 PRESERVATION OF THE STAKED CENTRE LINE 55
2.2.3 ROAD PROFILE SURVEY AND PROTECTION 55
2.2.4 STAKEOUT OF STRUCTURES 55
2.2.5 SURVEYING ACTIVITIES DURING CONSTRUCTION 56
2.2.6 HANDOVER AFTER COMPLETION OF WORK 56

2.3 CLEARING AND GRUBBING 58
2.3.1 REMOVAL OF BRUSHES AND TREES 58
2.3.2 REMOVAL OF MANMADE STRUCTURES, TRAFFIC SIGNS, BILLBOARDS, ETC. 59
2.3.3 DEMOLITION OF BUILDINGS 60
2.3.4 REMOVAL OR RELOCATION OF EXISTING UTILITIES 61
2.3.5 IDENTIFICATION AND PROTECTION OF UTILITY SERVICES AND OTHER CONNECTIONS 61

2.4 PROTECTION AND RESTORATION OF PROPERTY, MONUMENTS, WATERCOURSES, LAKES AND TREES 62

2.5 PROTECTION AND RESTORATION OF FORESTS 62

3. EARTHWORKS 64

3.1 GENERAL REMARKS 64
3.1.1 DEFINITIONS 64

3.2 EXCAVATION OF TOPSOIL 65

3.3 WIDE EXCAVATION 66
3.3.1 WIDE EXCAVATION IN CLASS A MATERIAL 68
3.3.2 WIDE EXCAVATION IN CLASS B MATERIAL 69
3.3.3 WIDE EXCAVATION IN CLASS C MATERIAL 70

3.4 BENCHING EXCAVATION 72

3.5 EXCAVATION WORK FOR FOUNDATIONS AND FOUNDATION PITS 73

3.6 EXCAVATION OF UTILITY TRENCHES AND DRAINAGE DITCHES 75

3.7 EXCAVATION OF REGULATION CHANNELS 77

3.8 TRANSPORT OF MATERIALS 78

3.9 IMPROVEMENT OF FOUNDATION SOIL 80
3.9.1 QUALITY CRITERIA FOR PLACING OPERATIONS 82
3.9.2 REPLACEMENT OF WEAK FOUNDATION SOIL WITH BETTER MATERIAL 83
3.9.3 IMPROVEMENT OF SINKHOLES 84
3.9.4 IMPROVEMENT OF WEAK SUBGRADE AND FOUNDATION SOIL BY GEOTEXTILE 85

3.10 EMBANKMENT CONSTRUCTION 96
3.10.1 CONSTRUCTION OF EARTH EMBANKMENTS 99
3.10.2 PREPARATION OF SUBGRADE MADE OF EARTH MATERIALS 104
3.10.3 PREPARATION OF SUBGRADE MADE OF MIXED MATERIALS 105
3.10.4 PREPARATION OF SUBGRADE MADE OF STONE MATERIALS 105

3.11 WEDGE CONSTRUCTION NEXT TO STRUCTURES 106

3.12 DISPOSAL OF MATERIALS 107

3.13 PROTECTION OF SLOPES AND OTHER AREAS EXPOSED TO EROSION 108
3.13.1 SLOPE PROTECTION BY TOPSOIL PLACING AND GRASSING 109
3.13.2 SLOPE PROTECTION WITH GRASS COVERS - HYDROSEEDING 110
3.13.3 SLOPE PROTECTION BY WIRE FABRIC 110

3.14 CONSTRUCTION OF SHOULDERS 111
3.14.1 CONSTRUCTION OF SHOULDERS MADE OF GRANULAR STONE MATERIAL 112
3.14.2 CONSTRUCTION OF TOPSOILED AND GRASSED SHOULDERS 113
3.14.3 CONSTRUCTION OF CONCRETE SHOULDERS 113

4. DRAINAGE 114

4.1 GENERAL REMARKS 114
4.1.1 DEFINITIONS 114

4.2 SURFACE DRAINAGE 115
4.2.1 DRAINAGE DITCHES 115
4.2.2 DITCH WITHOUT LINING 116
4.2.3 DITCH LINED WITH CONCRETE - MONOLITHIC CONSTRUCTION 116
4.2.4 DITCH LINED WITH CONCRETE - PREFABRICATED CONSTRUCTION 118

4.3 ROAD CULVERTS 119
4.3.1 Precast Concrete Pipe Culverts 119
4.3.2 Construction 119
4.3.3 EXCAVATION FOR CULVERT FOUNDATIONS 121
4.3.4 CONSTRUCTION OF CONCRETE CULVERTS 121

4.4 ROAD DRAINAGE 122
4.4.1 EXCAVATION OF DRAINAGE DITCHES 123
4.4.2 PREPARATION OF BEDDING FOR DRAINAGE PIPES 124
4.4.3 PREPARATION OF SAND BEDDING 124
4.4.4 PREPARATION OF CONCRETE BEDDING 125
4.4.5 INSTALLATION OF DRAINAGE PIPES 126
4.4.6 FIRE FIGHTING ELEMENTS - CAST IRON PIPES 132
4.4.7 MANHOLES 142
4.4.8 MONOLITHIC MANHOLES 142
4.4.9 PRECAST CONCRETE MANHOLES 143
4.4.10 INSTALLATION OF MANHOLE COVERS 144
4.4.11 DRAINS (WATER INLETS) 144
4.4.12 DRAINAGE DITCH BACKFILLING 145
4.4.13 CURBS 146
4.4.14 GUTTERS 147
4.4.15 CONSTRUCTION OF CONCRETE GUTTERS 147
4.4.16 CONSTRUCTION OF GUTTER OR CURB OUTLETS 148

4.5 SEPARATORS AND OVERFLOW SPILLWAYS 149
4.5.1 CONCRETE WORK 150
4.5.2 FORMWORK AND SCAFFOLDING 154
4.5.3 STEEL BENDING WORK 155
4.5.4 STEEL AND METAL WORK 155
4.5.5 PERMEABILITY TESTING 158

5. RETAINING WALLS 159

5.1 GENERAL REMARKS 159
5.1.1 DEFINITIONS 159

5.2 CONSTRUCTION OF WALLS 160
5.2.1 EXCAVATION FOR FOUNDATIONS 161
5.2.2 CONCRETING OF WALL FOUNDATIONS 162
5.2.3 CONCRETING WALL OUTSIDE OF FOUNDATIONS 162
5.2.4 CALCULATION OF WORK 162
5.2.5 SITE CLEARING 164
5.2.6 QUALITY CONTROL 164

5.3 REINFORCED EARTH WALLS (MSE WALLS) 164
5.3.1 DESCRIPTION 164
5.3.2 MATERIAL 164
5.3.3 CONSTRUCTION REQUIREMENTS 164

5.3.4 WALL ERECTION 165
5.3.5 BACKFILLING 165
5.3.1 ACCEPTANCE 166
5.3.2 MEASUREMENT 166
5.3.3 PAYMENT 166

5.4 EARTHWORK GEOSYNTHETICS 166
5.4.1 GENERAL 166
5.4.2 REINFORCEMENT GEOTEXTILE AND GEOGRID 168
5.4.3 GEOTEXTILE FILTER APPLICATIONS 168
5.4.4 ACCEPTANCE 168
5.4.5 MEASUREMENT 168
5.4.6 PAYMENT 168

5.5 GEOSYNTHETIC MATERIAL 169
5.5.1 GEOTEXTILE 169
5.5.2 GEOCOMPOSITE DRAIN 170
5.5.3 GEOMEMBRANE APPLICATIONS 171
5.5.4 STABILIZATION GEOGRID 171
5.5.5 REINFORCEMENT GEOTEXTILE AND GEOGRID 172
5.5.6 GEOMEMBRANE 173

6. CRUSHED STONE LAYERS 174

6.1 General 174

6.2 Mixing and Spreading 174

6.3 Payment 174

6.4 Subbase Course Aggregate 175

6.5 Sampling, Testing and Acceptance Requirements 175

7. BASE COURSE LAYRES 179

7.1 GENERAL INFORMATION 179
7.1.1 DEFINITIONS 179

7.2 GENERAL TERMS 179
7.2.1 MATERIALS 181

7.3 GRANULAR STONE MATERIAL BASE COURSE 183
7.3.1 QUALITY CONTROL 183
7.3.2 MATERIAL SAMPLING 183
7.3.3 LABORATORY TESTING 183
7.3.4 QUALITY REQUIREMENTS FOR GRANULAR STONE MATERIALS 183
7.3.5 GRAIN SIZE DISTRIBUTION 183
7.3.6 DETERMINATION OF ORGANIC SUBSTANCES 185
7.3.7 PERCENTAGE OF ORGANIC MATTER AND LIGHT-WEIGHT PARTICLES 185
7.3.8 OPTIMAL MOISTURE AND MAXIMUM DRY VOLUME MASS 185
7.3.9 CALIFORNIA BEARING RATIO – CBR 186
7.3.10 PHYSICAL AND MECHANICAL PROPERTIES 187
7.3.11 DOCUMENTS ON PREVIOUS MATERIAL TESTING 187
7.3.12 QUALITY REQUIREMENTS FOR PLACED BASE COURSE 187
7.3.13 MODULUS OF COMPRESSIBILITY AND THE DEGREE OF COMPACTION 188
7.3.14 GRAIN SIZE DISTRIBUTION 188
7.3.15 COURSE SURFACE EVENNESS 188

7.3.16 HEIGHT AND POSITION 189
7.3.17 GRADIENT 189
7.3.18 Production of granular stone material 189
7.3.19 TRANSPORT OF GRANULAR STONE MATERIAL 189
7.3.20 PLACING OF GRANULAR STONE MATERIAL 189
7.3.21 REQUIREMENTS FOR THE SUB-GRADE 189
7.3.22 WEATHER CONDITIONS 189
7.3.23 PLACING OF BASE COURSE 190
7.3.24 QUALITY ASSURANCE OF MATERIAL AND WORKS 190
7.3.25 PROCEDURE PRIOR TO THE PLACING OF GRANULAR STONE MATERIAL BASE COURSE WITHOUT BINDER 191
7.3.26 PRELIMINARY MATERIAL TESTING WITH APPRAISAL 191
7.3.27 DEFINITION OF THE PLACING METHOD ON THE TRIAL SECTION 191
7.3.28 TESTING DURING PLACING OF GRANULAR STONE MATERIAL BASE COURSE WITHOUT BINDER 192
7.3.29 CONTROL TESTING 192
7.3.30 AUDIT TESTING 193
7.3.31 TAKING OVER OF THE PLACED COURSE 193
7.3.32 DOCUMENTS PROVING THE QUALITY 193
7.3.33 CALCULATION OF WORK 193

7.4 BITUMEN TACK COAT FOR BINDING THE BITUMEN BASE COURSE WITH THE LAYER MADE ON THE BASIS OF HYDRAULIC BINDERS 194
7.4.1 DESCRIPTION 194
7.4.2 QUALITY REQUIREMENTS OF BITUMEN EMULSION 194
7.4.3 WORK 194
7.4.4 QUALITY CONTROL 194
7.4.5 AUDIT TESTING 195
7.4.6 CALCULATION OF WORK 195

7.5 BITUMEN BASE COURSE (BBC) 195
7.5.1 DESCRIPTION 195
7.5.2 QUALITY REQUIREMENTS OF COMPONENT MATERIALS 196
7.5.3 SEPARATED AND PARTIALLY SEPARATED GRANULAR STONE MATERIAL 196
7.5.4 SAND 197
7.5.5 BITUMEN BINDER 197
7.5.6 BBC QUALITY REQUIREMENTS 197
7.5.7 PROPERTIES OF ASPHALT MIXTURE 198
7.5.8 PROPERTIES OF PLACED COURSE 198
7.5.9 EXECUTION OF BBC 199
7.5.10 QUALITY CONTROL OF BBC 199
7.5.11 CONTROL TESTING 200
7.5.12 AUDIT TESTING OF PRODUCED ASPHALT MIXTURE 200
7.5.13 AUDIT TESTING OF PLACED COURSE 200
7.5.14 QUALITY EVALUATION OF THE PLACED BBC 200
7.5.15 CALCULATION OF WORK 201

7.6 BITUMINOUS BASE-WEARING COURSE (BBWC) 201
7.6.1 DESCRIPTION 201
7.6.2 QUALITY REQUIREMENTS FOR COMPONENT MATERIALS 202
7.6.3 SEPARATED AND PARTIALLY SEPARATED GRANULAR STONE MATERIAL 202
7.6.4 STONE FLOUR 203
7.6.5 BITUMEN BINDER 203
7.6.6 QUALITY REQUIREMENTS FOR BBWC 203
7.6.7 PROPERTIES OF ASPHALT MIXTURE 204
7.6.8 PROPERTIES OF PLACED COURSE 204
7.6.9 QUALITY CONTROL OF BBWC 204
7.6.10 CONTROL TESTING 205
7.6.11 AUDIT TESTING 205
7.6.12 QUALITY EVALUATION OF PLACED BBWC 206

7.6.13 CALCULATION OF WORK AND STANDARTS 206

8. ASPHALT PAVEMENT SURFACING 208

8.1 GENERAL INFORMATION 208
8.1.1 DEFINITIONS 208
8.1.2 GENERAL TERMS 208
8.1.3 MATERIALS 209

8.2 MATERIALS FOR ASPHALT MIXTURE PRODUCTION 211
8.2.1 CRUSHED STONE 211
8.2.2 STONE GRIT 212
8.2.3 SEPARATED AND PARTIALLY SEPARATED GRANULAR STONE MATERIAL 215
8.2.4 SAND 221
8.2.5 STONE FLOUR 223
8.2.6 ROAD CONSTRUCTION BITUMEN 225
8.2.7 POLYMER MODIFIED BITUMEN (PMB) 225
8.2.8 BITUMEN BINDER EMULSION 228
8.2.9 BITUMEN BINDERS FOR SURFACE DRESSING 230
8.2.10 BITUMEN AND ASPHALT ADMIXTURES 231
8.2.11 SYNTHETIC MATERIAL 231
8.2.12 PROOF OF QUALITY AND MATERIAL USABILITY 231

8.3 PRODUCTION, TRANSPORT AND PLACING OF ASPHALT MIXTURE 232
8.3.1 PRODUCTION OF ASPHALT MIXTURE 232
8.3.2 TRANSPORT OF ASPHALT MIXTURE 233

8.4 QUALITY ASSURANCE OF ASPHALT WORKS 237
8.4.1 Activities prior to execution of asphalt works 237
8.4.2 ACTIVITIES DURING THE EXECUTION OF ASPHALT WORKS 244
8.4.3 CONTROL TESTING 244
8.4.4 AUDIT TESTING 248
8.4.5 DOCUMENTATION 253
8.4.6 EVALUATION OF ASPHALT QUALITY 253
8.4.7 QUALITY EVALUATION OF PRODUCED ASPHALT MIXTURE 254

8.5 BITUMEN TACK COAT FOR BONDING OF ASPHALT LAYERS 260
8.5.1 DESCRIPTION 260
8.5.2 BITUMEN EMULSION QUALITY REQUIREMENTS 260
8.5.3 WORKS 260
8.5.4 QUALITY CONTROL 260
8.5.5 AUDIT TESTING 260
8.5.6 CALCULATION OF WORK 261

8.6 BONDING LAYER 261
8.6.1 DESCRIPTION 261
8.6.2 QUALITY REQUIREMENTS FOR BONDING LAYER COMPONENT MATERIALS 261
8.6.3 SAND 262
8.6.4 STONE FLOUR 262
8.6.5 BITUMEN BINDER 262
8.6.6 BONDING LAYER QUALITY REQUIREMENTS 262
8.6.7 PROPERTIES OF ASPHALT MIXTURE 263
8.6.8 PROPERTIES OF PLACED COURSE 263
8.6.9 CONTROL TESTING 264
8.6.10 CONTROL TESTING OF PLACED ASPHALT MIXTURE 264
8.6.11 AUDIT TESTING OF PRODUCED ASPHALT MIXTURE 264
8.6.12 AUDIT TESTING OF PLACED COURSE 264
8.6.13 QUALITY EVALUATION OF PLACED ASPHALT COURSE 265
8.6.14 CALCULATION OF WORK 265

8.7 ASPHALT-CONCRETE WEARING COURSE (AC-WC) 266
8.7.1 DESCRIPTION 266
8.7.2 QUALITY REQUIREMENTS OF WEARING COURSE COMPONENT MATERIALS (AC-WC) 267
8.7.3 SAND 267
8.7.4 STONE FLOUR 268
8.7.5 BITUMEN BINDER 268
8.7.6 WEARING COURSE QUALITY REQUIREMENTS (AC-WC) 268
8.7.7 ASPHALT MIXTURE PROPERTIES 269
8.7.8 PROPERTIES OF PLACED COURSE 269
8.7.9 WEARING COURSE ADHESION 269
8.7.10 WEARING COURSE QUALITY CONTROL (AC-WC) 273
8.7.11 CONTROL TESTING OF PRODUCED ASPHALT MIXTURE 273
8.7.12 AUDIT TESTING 273
8.7.13 AUDIT TESTING OF PRODUCED ASPHALT MIXTURE 273
8.7.14 AUDIT TESTING OF PLACED COURSE 274
8.7.15 QUALITY EVALUATION OF PLACED WEARING COURSE (AC-WC) 274
8.7.16 CALCULATION OF WORK AND STANDARDS 274

9. CONCRETE WORKS 279

9.1 CONCRETE FABRICATION AND PLACING REQUIREMENTS 279
9.1.1 INTRODUCTION 279
9.1.2 GENERAL TERMS AND DEFINITIONS USED IN THE FIELD OF CONCRETE CONSTRUCTION 280
9.1.3 SYMBOLS AND ABBREVIATIONS 284
9.1.4 GENERAL TERMS AND CLASSIFICATION OF CONCRETE STRUCTURES CULVERTS AND BRIDGES 285

9.2 PROPERTIES, FABRICATION AND CONFORMITY OF CONCRETE 285
9.2.1 CLASSES 285
9.2.2 FRESH CONCRETE 287
9.2.3 HARDENED CONCRETE 287
9.2.4 REQUIREMENTS FOR CONCRETE AND VERIFICATION PROCEDURES REQUIREMENTS FOR CONCRETE COMPONENTS 288
9.2.5 CEMENT 288
9.2.6 AGGREGATE 289
9.2.7 MIXING WATER 290
9.2.8 CHEMICAL ADMIXTURES 290
9.2.9 MINERAL ADMIXTURES 291
9.2.10 SELECTION OF CEMENT 293
9.2.11 USE OF AGGREGATE 293
9.2.12 USE OF RECYCLED WATER 294
9.2.13 Quantity of chlorides 294
9.2.14 TEMPERATURE OF CONCRETE 295
9.2.15 CONCRETE MIX COMPOSITION DESIGN BASED ON PROPERTIES DURING ITS USE 297
9.2.16 CONSISTENCE 297
9.2.17 QUANTITY OF CEMENT AND W/C RATIO 298
9.2.18 REQUIREMENTS FOR HARDENED CONCRETE 299
9.2.19 CONCRETE QUALITY REQUIREMENTS 300
9.2.20 REQUIREMENTS FOR DESIGNED CONCRETE 301
9.2.21 ADDITIONAL REQUIREMENTS 302
9.2.22 DELIVERY OF FRESH CONCRETE 303
9.2.23 VERIFICATION OF CONFORMITY AND CONFORMITY CRITERIA 306
9.2.24 CONFORMITY VERIFICATION FOR DESIGNED CONCRETE 306
9.2.25 PRODUCTION CONTROL 314

9.3 TESTING 316
9.3.1 EVALUATION AND DETERMINATION OF CONFORMITY 319
9.3.2 MARKING OF DESIGNED CONCRETE 322

9.4 REQUIREMENTS FOR REALIZATION OF CONCRETE WORKS 323

9.4.1 DOCUMENTATION 323
9.4.2 MATERIALS 324
9.4.3 SPECIAL FORMWORKS 325
9.4.4 FORMWORK INSERTS AND EMBEDDED COMPONENTS 325

9.5 CONCRETE REINFORCING STEEL 326
9.5.1 MATERIALS 326
9.5.2 BENDING, CUTTING, TRANSPORTING AND STORING 327
9.5.3 WELDING 329

9.6 PRESTRESSING STEEL - STRAND 330
9.6.1 PROTECTIVE PIPES (SHEATHS) 330
9.6.2 PRE-TENSIONED TENDONS 333
9.6.3 POST-TENSIONED TENDONS 333
9.6.4 PROTECTION MEASURES (GROUTING, OILING AND CONCRETING) 334
9.6.5 EXTERNAL OR INTERNAL UNBONDED TENDOS 335
9.6.6 GREASING OPERATIONS 335

9.7 STAY CABLE STRANDS 336

9.8 CONCRETING 338
9.8.1 CONCRETING OF COMPOSITE STRUCTURES 343
9.8.2 PLACING AND ADJUSTMENT 343
9.8.3 GEOMETRICAL TOLERANCES 345

9.9 INSPECTION 354

9.10 INSPECTION OF MATERIALS AND PRODUCTS 355

9.11 ACTIONS IN CASE OF NON-CONFORMITY 356
9.11.1 ACCEPTANCE AND CALCULATION OF CONCRETE WORK 357

9.12 REALIZATION OF CONCRETE WORKS AND STRUCTURES 357
9.12.1 GENERAL 357

9.13 CONSTRUCTION OF CULVERTS 358

9.14 CONSTRUCTION OF BRIDGES 359

9.15 ACCESSORY CONCRETE STRUCTURES 361

9.16 CONCRETE PAVEMENT 361

9.17 CALCULATION OF WORK 362

9.18 STEEL STRUCTURES 362
9.18.1 QUALITY CONTROL 363
9.18.2 CALCULATION OF WORK 363
9.18.3 QUALITY CONTROL 363
9.18.4 CONCRETING OF FOUNDATIONS 363
9.18.5 CALCULATION OF WORK 364
9.18.6 CONCRETING OF PILES 364
9.18.7 CALCULATION OF WORK 364
9.18.8 CONCRETING OF PIERS, MASSIVE WALLS AND VAULTS MADE OF NON-REINFORCED CONCRETE 365

9.19 SHOTCRETE 365
9.19.1 PREPARATION OF SHOTCRETE MIX 365
9.19.2 REALIZATION OF SHOTCRETING WORK 366

9.20 ROCK BOLTS 368

9.20.1 GENERAL 368
9.20.2 ANCHOR TESTING AND MONITORING 368
9.20.3 HOLES AND PREPARATION FOR INSTALLATION 369
9.20.4 SELF DRILLING ANCHORS 369

9.21 DOUBLE TWISTED WIRE MASH 372
9.21.1 GENERAL 372
9.21.2 REQUIRED SPECIFIACTIONS 372
9.21.3 TOLERANCES 373

9.22 STEEL WIRE ROPE 374
9.22.1 REQUIREMENTS AND STANDARDS 374

10. WATERPROOFING 376

10.1 GENERAL PRINCIPLES FOR THE INSTALLATION OF WATERPROOFING 376

10.2 BITUMINOUS COATING 378

10.3 EPOXY RESIN 379

10.4 BITUMINOUS SEALING COMPOUND 380

10.5 BITUMINOUS STRIPS 381
10.5.1 GENERAL QUALITY REQUIREMENTS FOR POLYMER-BASED BITUMINOUS STRIPS FOR WELDING WITH A POLYESTER-FELT INSERT 381
10.5.2 QUALITY REQUIREMENTS FOR MATERIALS 382

10.6 SEALING LAYER 382

10.7 PROTECTIVE LAYER 383

10.8 QUALITY CONTROL 385

10.9 CONTROL TESTS 385

10.10 AUDIT TESTS 385

10.11 QUALITY EVALUATION 386

10.12 CALCULATION OF WORK 387

11. METALLIC PROTECTION 388

11.1 SURFACE PREPARATION 388

11.2 REALIZATION OF PROTECTIVE COATS 389

11.3 Control testing and determination of compliance 390

12. SHEAR CONNECTORS 391

12.1 REINFORCEMENT 391

12.2 CONSTRUCTION 391

13. DAMAGE OF CONCRETE 394

13.1 CRACKS 394

13.2 DAMAGE OF CONCRETE BY FREEZING ACTION 394

13.3 DAMAGE OF CONCRETE BY FREEZING AND DEICING SALT 395

13.4 ABRASIVE DAMAGE TO CONCRETE 395

13.5 CORROSION OF CONCRETE 395

13.6 STANDARDS AND TECHNICAL REGULATIONS 395

14. ROAD FURNITURES 399

14.1 GENERAL REMARKS 399

14.2 DEFINITIONS 399

14.3 TRAFFIC SIGNS (VERTICAL AND HORIZONTAL SIGNS) 400
14.3.1 SHAPE AND DIMENSIONS OF TRAFFIC SIGNS 400
14.3.2 MATERIAL 401
14.3.3 CONSTRUCTION REQUIREMENTS 401
14.3.4 SIGN PANELS 401
14.3.5 ACCEPTANCE 403
14.3.6 PERMANENT PAVEMENT MARKINGS 403
14.3.7 CONSTRUCTION REQUIREMENTS 403
14.3.8 MEASUREMENTS 405
14.3.9 PAYMENT 405
14.3.10 QUALITY CONTROL 405
14.3.11 WARNING SIGNS 405
14.3.12 REGULATORY SIGNS 406
14.3.13 INFORMATION SIGNS 406
14.3.14 CHANGEABLE SIGNS 407

14.4 PRELIMINARY TESTING 407

14.5 CONTROL TESTING 408

14.6 AUDIT TESTING 408

14.7 ROAD MARKINGS ALONG THE ROAD 409

14.8 ROAD MARKINGS ACROSS THE ROAD 409

14.9 OTHER ROAD MARKINGS 409

14.10 ROAD FURNITURE FOR MARKING OF ROAD EDGE 409
14.10.1 MARKER POSTS AND OTHER MARKINGS 409
14.10.2 MANUFACTURE 410
14.10.3 CALCULATION OF WORK 410
14.10.4 MARKER POSTS ON OPEN ROAD SECTIONS 410
14.10.5 MARKER POSTS IN TUNNELS 410
14.10.6 OTHER ROAD EDGE MARKINGS 410

14.11 TRAFFIC BARRIERS 411
14.11.1 STEEL BARRIERS 411
14.11.2 MANUFACTURE 411
14.11.3 QUALITY CONTROL 412
14.11.4 CALCULATION OF WORK 412

14.12 CONCRETE PARAPET 412
14.12.1 MANUFACTURE 413
14.12.2 QUALITY CONTROL 414
14.12.3 CALCULATION OF WORK 414

14.13 SAFETY CHAIN-LINK FENCES 414
14.13.1 MANUFACTURE 414
14.13.2 QUALITY CONTROL 415
14.13.3 CALCULATION OF WORK 415

14.14 HEDGE 415
14.14.1 MANUFACTURE 415
14.14.2 CALCULATION OF WORK 415

14.15 OTHER ROAD FURNITURE 416
14.15.1 MANUFACTURE 416
14.15.2 QUALITY CONTROL 416
14.15.3 CALCULATION OF WORK 416

14.16 TRAFFIC SIGNS BEARING STRUCTURES 416
14.16.1 MANUFACTURE 417

14.17 ELECTRICAL WORKS 418
14.17.1 **GENERAL FOR LUMINAIRES** 418
14.17.2 **ELECTRICAL CABINE** 418
14.17.3 **CABLES** 421
14.17.4 **POLES** 421
14.17.5 **BRIDGE ILLUMINATION** 423

14.18 STANDARDS 426
14.18.1 SYSTEM COMPONENTS 427
14.18.2 Light System Manager 427
14.18.3 POWER DATA SUPPLY 428

List of Figures:

Figure 1 - Geotextile overlapping in the direction of filling operations 92
Figure 2 - Smallest mandrel diameter for welded bars and steel fabric 328
Figure 3 - Minimum curing times for concrete belonging to exposure classes other than X0 and XC1 341
Figure 4 - Permitted deviations for the position of base supports (foundations) 346
Figure 5 – Permitted vertical *deviations for columns and walls* 347
Figure 6 –Permitted deviations for column and walls, horizontal cross section 348
Figure 7 - Permitted deviations for beams and slabs 349
Figure 8 - Other permitted deviations for beams and slabs 350
Figure 9 - Dimensional tolerances for cross sections, protective layer of concrete and reinforcement 351
Figure 10 - Permitted sectional deviations 352
Figure 11 - Permitted deviation for the orthogonality of cross section 352
Figure 12 - Permitted deviations for surfaces and edges 353
Figure 13 - Recommended values for permitted deviations of holes and inserts 354
Figure 14 - Guidance for the selection of inspection class 355
Figure 15 - Inspection requirements for materials and products 356
Figure 16 - Proper shotcrete spraying sequence 367
*Figure 17 - Rebound in case of shotcreting according to dry procedure*Slope Protection 368
Figure 18 – Double Twisted Wire Mash Example 373
Figure 19 - Quality requirements for the basic bituminous coating 378
Figure 20 - Quality requirements for joint sealing bituminous compound 378
Figure 21 - Electrical Scheme 420
Figure 22 - Pole Example 422

List of Tables

Table 1 - Foundation soil quality determination criteria 82
Table 2 - 1 Deformation and compressibility (Ms) moduli for soil classes U1 to U3 87
Table 3 - Mechanical requirements for geotextiles when fill material is made of rounded or angular grains with dmax ≤ 63 mm 87
Table 4 - Mechanical requirements for geotextiles when fill material is made of angular grains with dmax > 63 mm 88
Table 5 - Required mechanical properties of geotextile for filtering applications 88
Table 6 - Hydraulic properties of geotextile used for separation and strengthening 89
Table 7 - Hydraulic properties of geotextile used for filtering and drainage 89
Table 8 - Tests/parameters/standards for geotextile selection 91
Table 9 - Minimum overlapping values 92
Table 10 - Quality criteria for earth embankment layers 100
Table 11 - Quality criteria for embankments made of mixed materials 101
Table 12 - Quality criteria for embankments made of rock materials 102
Table 13 - Construction Tolerance 165
Table 14 - Separation and Stabilization Geotextile and Geotextile Filter Requirements 169
Table 15 - Paving Geotextile Requirements 170
Table 16 - **Geocomposite Drain Requirements** 171
Table 17 - Stabilization Geogrid Requirements 172
Table 18 - Reinforcement Geotextile and Geogrid Polymer Requirements 173
Table 19 - Reinforcement Geotextile and Geogrid Strength Requirements 173
Table 20 - Geomembrane Requirements 173
Table 21 - Grain size distribution limit values of granular stone material for base course without binder 185
Table 22 - Physical and mechanical properties of granular stone material for execution of base course without binder 186
Table 23 - Requirements for granular stone material base course without binder 188
Table 24 - Application and thickness of placed BBC in relation to the traffic load group 196
Table 25 - Application of quality category of stone grit for BBC in relation to the traffic load group 196
Table 26 - Application of quality category of separated and partially separated granular stone material for BBC in relation to the traffic load group 197
Table 27 - Application of quality category of sand for BBC in relation to the traffic load group 197
Table 28 - Use of bitumen in relation to the traffic load group 197
Table 29 - Scope of stone compound grain size distribution for BBC 198
Table 30 - Provisional proportion of bitumen in asphalt mixture for BBC 198
Table 31 - Physical and mechanical properties of asphalt mixture for BBC in relation to the traffic load group 198
Table 32 - Percentage of voids, rate of compactness, thickness and bonding of layers executed by BBC in relation to the traffic load group 199
Table 33 - Evenness, elevation, cross-fall and horizontal position of the placed BBC in relation to the traffic load group 199
Table 34 – Scope of asphalt mixture stone compound grain size distribution for BBWC 203
Table 35 - Provisional percentage of bitumen in asphalt mixture for BBWC 203
Table 36 - Physical and mechanical properties of asphalt mixture for BBWC 204
Table 37 - Percentage of voids, rate of compactness and thickness of placed BBWC 204
Table 38 - Categories of stone quality as raw material for production of granular stone material 212
Table 39 - Requirements for grain size distribution of stone grit 213
Table 40 - Purity requirements for stone grit 215
Table 41 - Quality requirements for physical and mechanical properties of stone grit of igneous and/or metamorphic origin 215
Table 42 - Quality requirements of physical and mechanical properties of stone grit obtained by crushing stone of igneous origin, gravel and scree and non-crushed stone grit (gravel,scree). 216
Table 43 – Quality requirements of separated and partially separated granular stone materials 218
Table 44 – Quality requirements for physical and mechanical properties of separated and partially separated granular stone materials. 220
Table 45 - Grain size distribution requirements for sand 221
Table 46 - Quality categories of igneous origin crushed sand 222
Table 47 - Quality categories of sedimentary origin crushed sand 222
Table 48 - Quality categories of natural sand 223
Table 49 - Stone flour quality categories 224
Table 50 - Purity and quality requirements for physical properties of filler 225

Table 51 - Quality requirements of polymer modified bitumen 227
Table 52 - Quality requirements for bitumen emulsion for micro- asphalt mixture production according to cold procedure 230
Table 53 - Highest storage temperature of road construction bitumen in reservoirs 232
Table 54 - Highest storage temperature of road construction bitumen in reservoirs 233
Table 55 – Lowest allowed asphalt mixture temperature at the placing site 235
Table 56 – Allowed deviations of the grain size distribution of stone mix of asphalt mixture samples in relation to the initial job mix formula for BBC and BBWC 240
Table 57 – Allowed deviation of the obtained mean value of bitumen percentage in the asphalt mixture sample from the percentage of bitumen defined in the initial job mix formula of asphalt mixture for BBC, BBWC, TC, WC –AC, depending on the number of tested samples. 240
Table 58 – Allowed deviations of the grain size distribution of stone mix of asphalt mixture samples in relation to the initial job mix formula for TC and WC-AC. 240
Table 59 – Allowed deviations of the grain size distribution of stone mix of asphalt mixture samples in relation to the initial job mix formula for WC-SMA. 241
Table 60 – Allowed deviation of the obtained mean value of bitumen percentage in asphalt mixture sample from the percentage of bitumen defined in the initial job mix formula of asphalt mixture for WC-SMA depending on the number of tested samples. 242
Table 61 - Allowed deviations of the placed course thickness from the designed thickness 257
Table 62 - Deductions due to the unevenness of the wearing course depending on the traffic load 259
Table 63 - Grain size distribution of asphalt mixture stone mix 263
Table 64 - Rough estimate of bitumen content in asphalt mixture for BL 263
Table 65 - Physical and mechanical properties of asphalt mixture for VS 16 and VS 22 depending on the traffic load group 263
Table 66 - Percentage of voids, rate of compactness, thickness and bonding of placed courses in relation to the traffic load group 263
Table 67 - Evenness, height, cross fall and horizontal position of the executed bonding layer 264
Table 68 - Technological thickness of the placed AC -WC 266
Table 69 - Application of AC-WC depending on the traffic load group 267
Table 70 - Use of quality category of stone grit for AC-WC depending on the traffic load group 267
Table 71 - Use of quality category of sand for AC-WC depending on the traffic load group 267
Table 72 - Limit values of stone mix grain size distribution for AC-WC 268
Table 73 - Rough estimate of bitumen content in asphalt mixture for AC- WC 269
Table 74 - Physical and mechanical properties of asphalt mixture for AC- WC in relation to the traffic load 269
Table 75 - Percentage of voids, rate of compactness and bonding of placed AC-WC course in relation to the traffic load group 269
Table 76 - Evenness, height, cross fall and horizontal position of the placed AC-WC in relation to the traffic load group 270
Table 77 - Limit values of the texture depths 271
Table 78 - Limit values of resistance to slipperiness 271
Table 79 - Procedure for evaluation Of the resistance to slipperiness by combined method (SRT pendulum and "sand blasting") 272
Table 80 - Limit values of the friction coefficient according to SCRIM method 272
Table 81 - Slump classes 287
Table 82 - Vebe classes 287
Table 83 - Maximum quantity of chlorides in concrete 295
Table 84 - Limit values of composition and compressive strength classes of concrete 296
Table 85 - Tolerances for specified consistence values 298
Table 86 - Conformity criteria for compressive strength 309
Table 87 - Conformity criteria for other properties 311
Table 88 - Conformity criteria for consistence 312
Table 89 - Conformity criteria for consistence 313
Table 90 - Recorded data and other relevant documents 316
Table 91 - Tolerances for mixing of concrete components 318
Table 92 - Reinforcing steel components 327
Table 93 - Smallest diameter of the steel bending mandrel 328
Tabela 94 - Të dhënat e ankorimeve të vetë-shpimit 371
Table 94 – Self-drilling anchors data 371
Table 95 - Steel Wire Rope Example 374

Table 96 - Dimensions and properties of wire 375
Table 97 - Quality requirements for epoxy resin 379
Table 98 - Quality requirements for quartz sand 380
Table 99 - Quality requirements for bituminous sealing compound 380
Table 101 - Quality requirements for bituminous strips with glass fiber inserts, as related to placing method, welding or gluing. 381

1. GENERAL

1.1 GENERAL REMARKS

1.1.1 ABBREVIATIONS

Appropriate abbreviations of terms used in these GTR are explained as follows:
****GTR General Technical Requirements for Road Works****
CMD Construction Management Design
STR Special Technical Requirements
GRCC General Requirements for Construction Contracts
SRCC Special Requirements for Construction Contracts
QCQAP Quality Control and Quality Assurance Program
ISO International Organization of Standardization
EN European Norms (Standards)
EC Eurocodes
ARDM Albanian Road Design Manual
DIN German standard (Deutsches Institut für Normung)
ASTM American Society for Testing and Materials

This section sets general requirements for the realization of works and specifies minimum quality requirements for materials, products and works as applied during realization of works. The GTR are written in such a way that they form a part of the contract while requirements relating to special works are included in the contract as Special Technical Requirements (STR).

Materials, products, equipment and works must comply with the standards and technical regulations specified in the design documentation. If no standard is specified, then an appropriate EN (European standard) must be applied. If a standard or regulation becomes invalid during realization of the project, it will be substituted by an appropriate replacement standard or regulation.

The Contractor may propose application of generally recognized technical rules (standards) issued by a foreign standardization body (such as ISO, EN, DIN, ASTM, etc.), subject to written explanation and approval of the Supervising Engineer. This change may be accepted by the Supervising Engineer if approved by the Designer. The Contractor is required to register this change in the working design.

1.1.2 GENERAL NOTES

These GTR set minimum quality requirements for materials, products and works. The GTR are written in such a way that they can form a part of a contract while requirements relating to special works will be included in the contract as Special Technical Requirements (STR). The GTR take into account all applicable Albanian regulations and technical standards (ARDM).

1.1.3 USE OF THESE GENERAL TECHNICAL REQUIREMENTS

These GTR contain technical requirements for the performance of works, methods for quality assurance and quality assessment, and methods for calculation of completed work. The GTR are applicable to works contained in cost estimates of projects, but also to works subsequently defined on the site to ensure full completion of the work specified in the contract. On some projects, special requirements may also be specified to take into account various additional requirements, i.e. particular features of the project. The use of GTR is mandatory when they form an integral part of technical documents of the contract.

1.2 DEFINITIONS

The terms and expressions used in these General Technical Requirements, together with meanings assigned to them, are presented in the following section.

1.2.1 DEFINITION OF GENERAL TERMS

The following definitions are provided to enable unambiguous interpretation of some general terms and expressions as used in these GTR:

Public road (accoriding to law) **is formed of:**

1. road structure (subgrade, road base, pavement structure, bridge, viaduct, underpass, overpass, culvert, tunnel, gallery, retaining and facing wall, pedestrian bridge, pedestrian underpass),
2. road drainage and water purification facilities,
3. roadside i.e. land on both sides of the r
4. oad that is needed for an undisturbed road maintenance, the width of which is as specified in the road design, but should be no less than one meter counting from the line connecting end points of the road's cross section,
5. right-of-way, covering the land on which the road structure has been built, roadside areas, and the land for structures that are used for road maintenance and provision of services to drivers and passengers as based on the road design (road maintenance houses, road maintenance offices, storehouses, depots, gas stations, service stations, parking lots, rest areas, etc.),
6. any structure situated within the right-of-way,
7. fixed measuring facilities and devices for collecting vehicle-related data,
8. connections to public road that have been built within the right-of-way,
9. traffic signs and devices for traffic control and safe operation of traffic, including road furniture (traffic signs, illuminated traffic controllers, fixed telecommunication devices, traffic installations and lighting, road markings, signposts, traffic counters, tunnel installations, devices and equipment, accessories for parking lots, rest areas, etc.),

Structures and equipment for the protection of roads, traffic and natural environment (snow fences, wind screens, protection against soil creep and deposits, protective and safety fences, protection against noise and other harmful environmental influences, etc.).

Design denotes preparation of conceptual and final design documents as needed for the delivery of provisional and final building permits, as well as preparation of working design documents for actual construction work, including also design documents for the removal of structures.

Construction denotes performance of preliminary works, construction work (including finishing work and installations), re-construction of existing buildings, as well as installation and assembly of equipment, ready-made structural elements and structures.

Reconstruction denotes performance of construction work on an existing structure or actions taken to bring the existing structure to an acceptable state of repair if such work and actions significantly alter features of such structure (as specified in the Building Law) or features of a cultural monument.

Structure (as defined in the Building Law) is a man-made facility formed by construction work and linked to the ground; it is composed of the structural part or of the structural part combined with the installed equipment with which it forms a technical and technological entity; the term also denotes any independent plant linked to the ground that is composed of installed equipment and forms a technical/technological entity.

Structural component is made of materials and structural products, with or without structural installations.

Equipment denotes installed plants, devices, machines, process-related installations and other installed

products forming part of a technological process.

Preliminary work covers construction of accessory structures of preliminary character as well as realization of other works for the organization of the construction site and for application of an appropriate construction technology.

Maintenance of structures refers to activities aimed at inspecting condition of structures and maintaining structures in good state of repair, and includes actions for ensuring safety, mechanical resistance and stability of structures, and for the preservation of human life and health.

Removal of structures is demolition or disassembly of a structure and removal of residual materials, equipment and other elements.

Construction products are products destined for permanent installation into a structure, and include construction materials, prefabricated elements, precast segments, etc.

Construction site is an area in which the construction work is performed, and other temporarily occupied areas that are used for construction work.

Temporary structure is a structure built or placed temporarily on the construction site to fulfill a particular purpose, to enable application of an appropriate construction technology, etc.

Client is a legal of physical person in whose name the facility is being built and who has ordered, through construction contract concluded with the Contractor, the works specified in that contract.

Designer is a person duly authorized to perform design work in accordance with the BL and regulations based on this law that has been selected for the preparation of the design documentation.

Chief Designer is a person authorized to perform design work in accordance with the BL; he is responsible for the completeness and harmonization of individual designs, in case several designers or design offices are taking part in the design work.

Contractor is a legal or physical person registered for performance of his activities that has accepted, through construction contract concluded with the Client, the obligation to perform the works specified in the contract.

Contract constitutes, together with its integral parts, a written agreement about performance of construction work, that has been signed by the Client and the Contractor.

Works denote all individual works that have to be performed in accordance with the contract.

Undertaking, internationally often referred to as **project**, is a group of interrelated activities aimed at achieving a predefined goal. With respect to these GTR, this term denotes a road construction project (preparations for construction and/or construction of a road section or an entire roadway).

Project Manager is a person appointed by the Client to monitor, on the Client's behalf, realization of the project.

Supervising Engineer is a person, duly authorized to perform expert supervision of construction work in accordance with the BL and regulations passed based on this law, that has been appointed to perform expert supervision on behalf of the Client.

Lead Site Engineer (lead construction manager) or **Site Engineer** (construction manager) is a Contractor's employee in charge of construction works or in charge of some of the construction works.

Reviewer is an architect or engineer, duly certified according to the BL and regulations based on this law, that can perform control of the project and is responsible for the compliance of the controlled project, or of a controlled part of the project, with the requirements specified in the BL.

Overbreak is a positive deviation in quantities of some completed work with respect to design quantities.

Underbreak is a negative deviation in quantities of some completed work with respect to design quantities.

Unforeseen work is work that is not included in the contract, but needs to be realized to enable proper completion of the construction work in accordance with the contract.

Extra work is the work that is not included in the contract and is not required for completion of the structure, but is requested by the Client.

Design contains harmonized design documents of various professions, by which technical solution is given for a public road or for an integral part of such road at the level as required by the law.

All individual design documents that form a public road design must be harmonized with each other and must constitute a part of an uniform technical-technological entity.

Building Inspector is an authorized person that supervises work of all participants in the construction, maintenance, or demolition projects, for which building permit, operating permit, or removal/demolition permit is delivered by the competent ministry, county office or office of the City; the Inspector checks quality of construction products in accordance with the Building Law, regulations based on that law, and other relevant regulations, unless otherwise specified in an another law.

1.2.2 DEFINITIONS RELATED TO ROAD CLASSIFICATION

Some of the terms used in national legislation have been defined as follows:

Road is every public road and every unclassified road on which traffic is operated.

Public road is an area of general significance for the traffic that can freely be used by every person under conditions specified by the Law, and that has been defined by a competent authority as a public road.
Depending on their social, traffic and economic significance, public roads can be classified into one of the following three groups:

Public roads are classified in accordance with the criteria defined by the government of the Republic of Albania. The Act on classification of public roads, which defines state, county and local roads, is passed by the Minister of Transport and Energy, and is published in the Official Bulletin.

Motorway is a public road purposely built and exclusively destined for motor vehicle traffic, with two physically separated pavements (by median, traffic barriers, etc.) enabling operation of traffic in opposite directions; each pavement has at least two traffic lanes and, depending on the configuration of the terrain, one emergency stopping lane in each direction; there is no at-grade intersection with other roads and railway or tram lines. Vehicles can enter the motorway or leave the motorway only by specially built acceleration and deceleration lanes and ramps, which enable safe flow of traffic and which are, just like the motorway, properly marked by traffic signalization as prescribed by the law.

Road exclusively destined for motor vehicle traffic is a public road with at least two traffic lanes which enables safe operation of motor vehicle traffic and which may only be used by motor vehicles, and is marked as such by appropriate traffic signalization.

Unclassified road is an area that is used for operation of any kind of traffic and is accessible to a number of different users (e.g. village road, field and forest path, road on dyke, approach road and parking area, traffic areas on gas station, etc.)

Unpaved road is a road without a pavement structure or without a modern pavement surfacing even when it has a pavement structure at its contact with a public road.

Traveled way is a portion of the right-of-way that is principally destined for the motor vehicle traffic. It consists of driving lanes, overtaking lanes, marginal strips, emergency lanes and additional lanes.

Pavement is a part of the traveled way that is destined for vehicle traffic in one direction, and consists of either one or several traffic lanes.

Traffic lane is a part of the pavement and its width is such that it enables an undisturbed traffic of one row of motor vehicles moving at design speed in one direction of traffic flow.

Marginal strips are used for the safe delimitation of the traveled way and for painting the road markings; they are built on both sides of the traveled way and they represent visual roadside elements that enhance traffic safety.

Urban area is an area in which rows or clusters of buildings are situated on the one or on both sides of the

road, giving it a street-like appearance; its limits are marked by traffic signs for marking urban areas.

Vehicle is every means of transport destined for use on the road, with the exception of wheelchairs for disabled persons and baby carriages.

Motor-operated vehicle is every self-propelled vehicle with the exception of vehicles moving on rails.

Motor vehicle is a motor-operated vehicle that is mainly used for road transport of persons and goods or to pull attached vehicles destined for transport of persons and goods (tractor), except mopeds, farm tractors, motor cultivators and work machines.

Passenger car is a motor vehicle destined for the transport of persons which may have, in addition to the driver's seat, up to eight seats, and whose cargo carrying capacity does not exceed 250 kg.

Bus is a motor vehicle destined for the transport of persons which may have, in addition to the driver's seat, more than eight seats.

Truck is a motor vehicle specifically designed for the transport of goods.

Capacity is the allowed weight of cargo that can be carried by the vehicle, as specified in the vehicle manufacturer's declaration based on the allowable load bearing capacity of the vehicle's carrying structure.

Weight of the vehicle is the weight of the empty vehicle with the fuel tank filled, and with the vehicle's accessories and equipment as required by the law.

Total weight is the weight of the vehicle together with cargo transported by the vehicle, including the weight of persons using the vehicle, and the weight of the attached vehicle with its cargo - if such vehicle is attached to the pulling vehicle.

Maximum allowable weight is the weight of the vehicle plus the maximum allowable weight of the vehicle's cargo.

Axle load is a portion of the vehicle's total weight by which an axle exerts load on the surface when the vehicle is parked on a horizontal surface.

Traffic load is the number of passages of equivalent axle loads over a design period.

1.2.3 DEFINITIONS RELATED TO ROAD CONSTRUCTION

To enable an unequivocal interpretation of terms, it is appropriate to define individual parts of the road structures that are treated in these General Technical Requirements. Whenever used in these General Technical Requirements, such terms shall be interpreted as specified below.

Natural soil is the part of the lithosphere on which construction of a road or an another road facility is planned.**Foundation soil** (treated natural soil) is natural soil on which an embankment is to be built; it is treated in such a way that it complies with relevant geotechnical requirements.

Weak foundation soil is the layer that can not be improved by usual methods to the level complying with relevant geotechnical requirements so that, due to its unfavorable condition or properties, this layer has to be

either removed or improved by special methods that will make it conformant with its planned use.

Top soil is the surface layer of soil that contains organic matter in such quantity that it is considered unfavorable for construction purposes.

Subgrade is the final and properly treated layer of embankment or, in the cutting, the treated natural soil or replaced natural soil, conforming to specified levels and inclinations which meets, by its physical and chemical properties, appropriate design requirements; it is therefore able to withstand - without harmful consequences - any load exerted by the overlying pavement structure as well as the road traffic load.

Embankment is a part of the road lying on the foundation soil (treated natural soil); it is made of earth, stone or mixed material.

Stabilized layer is a layer of earth or other material placed in the foundation soil, embankment or subgrade, to which a binder is added to increase its bearing capacity and resistance to hydrological and climatic influences. The soil material can also be improved by correcting its grain size distribution (mechanical stabilization).

Pavement structure is a system consisting of interlinked layers, namely: subbase and binder, one or several base courses, and a layer ensuring protection against freezing action. Its purpose is to take on traffic load and to transfer and spread this load to a larger area in order to reduce the load to the level that can be supported by the subgrade. This ensures proper mechanical resistance and stability of the road regarded as a civil engineering structure, while also ensuring safe and comfortable driving to road users. Pavement structures may be flexible, rigid or composite.

Base course is a part of the system of layers making up the pavement structure; it lies between the subgrade and the pavement surfacing or concrete slab, and is made of the unbound granular material or of material bound (stabilized) by an appropriate binder.

Surfacing is the top portion of the pavement structure and its surface is directly exposed to traffic load. The asphalt surfacing is realized in one or two layers. The concrete surfacing is the concrete slab itself if it is realized in one layer; it is the top part of the concrete slab if it is realized in two layers. After construction it has to have surface properties that are suitable for the safe operation of traffic (adherence, evenness, visibility, noise, etc.).

Leveling layer is the layer of variable thickness that is placed onto the existing layer in order to achieve the required thickness or the design thickness, and to ensure suitable evenness of the overlaying layers.

Shoulder is the strengthened or unstrengthened lateral portion of the road crown, between the traveled way and the crown edge at both sides of the traveled way. It gives lateral stability to the pavement structure. The shoulder does not serve for the operation of traffic, and is used for placing traffic signalization and safety equipment.

1.3 STANDARDS FOR MATERIALS, EQUIPMENT AND WORKS

1.3.1 STANDARDS AND TECHNICAL REGULATIONS

Materials, products, equipment and works must comply with the standards and technical regulations specified in the design documentation. If no standard is specified, then an appropriate EN (European standard) must be applied. If a standard or regulation becomes invalid during realization of the project, it will be substituted by a replacement standard or regulation as appropriate.

The Contractor may propose application of generally recognized technical rules (standards) issued by a foreign standardization body (such as ISO, EN, DIN, ASTM, etc.) but must substantiate the proposal with a written explanation. The Contractor's proposal shall be subject to the approval of the Supervising Engineer and the Designer. The Contractor is required to register this change in the working design.

1.3.2 ALTERNATIVE MATERIALS AND EQUIPMENT

The Contractor may propose alternative materials or equipment, i.e. materials or equipment differing from the ones specified in the design or in the contract, provided that they:

have the same quality characteristics and other properties,have similar quality characteristics and other properties, and that they comply with recognized technical rules (standards), and comply with principal requirements for construction work as specified in the technical regulation.

The Contractor is required to submit appropriate documentation for such alternative materials or equipment, including *inter alia* technical descriptions, drawings and specifications, in order to prove that the alternatives selected comply with requirements of this clause. The use of such alternative materials or equipment shall be approved by the Supervising Engineer as defined in Section above. Any extra cost arising from the use of such alternative materials or equipment shall be borne by the Contractor.

1.4 DESIGN DOCUMENTATION

The design documentation consists of the preliminary design, final design and working design.

The Contractor is required to inspect the final design prior to the commencement of works as well as to advise the Client about any error in the design documents.

1.4.1 PRELIMINARY DESIGN

The preliminary design is the set of adequately harmonized drawings and documents showing basic physical, functional and technical solutions for the future facility and its position in space. The design is presented on the basic national map or on an another topographic map produced on an appropriate scale. It contains drawings, technical solution, data about geotechnical and other investigations, and indicators showing acceptability of the technical solution (mechanical stability, fire protection, water supply and, if necessary, drainage and traffic solution).

The preliminary design is the basis for the delivery of the provisional building permit.

1.4.2 FINAL DESIGN

The final design is the set of adequately harmonized design documents which together provide an appropriate technical solution for the project. The location permit and special construction requirements are an integral part of the final design.

The final design may be formed of a number of different design documents:

- architectural design,
- civil engineering design,
- installation work design,
- equipment installation design,
- other types of design (such as geotechnical design, foundation work design, landscape improvement design, noise protection design, etc.)

Individual design documents that are included in the final design contain:

1. drawings,
2. technical description,
3. construction cost estimate,
4. data on geotechnical and other investigations that have served as basis for design work,
5. analysis of mechanical resistance and stability, including determination of hydraulic, energy-related and physical properties proving that the facility has been designed in accordance with the technical regulations,
6. quality control and quality assurance program,
7. layout of the facility on the basic national map, or on an another topographic map of appropriate scale,
8. waste management method which should be, in case of toxic waste, in accordance with toxic waste management regulations,
9. Special technical requirements.

The final design is a basis for the delivery of the building permit.

The Contractor will receive from the Client one copy of the approved final design, and one copy of the design approved by the Designer and the Chief Designer.

1.5 PROVISIONAL BUILDING PERMIT

Portions of the facility for which individual building permits will be issued, upon request by the Client, shall be defined in the provisional permit.

The provisional permit enables commencement of preliminary work, but does not enable commencement of actual works on the project. The approved preliminary design and location permit are integral parts of the provisional building permit.

1.6 INVESTIGATION REPORT

The investigation report, i.e. the report on previous geotechnical or other investigations, serves as the basis for preparation of the final design. The description of previous investigations is an integral part of the technical description contained in the final design.

The investigation report is not an integral part of the documents serving as basis for the delivery of the building permit, unless otherwise provided by law.

The Client will submit a copy of the investigation report to the Contractor, as well as to the Supervising Engineer who will monitor and inspect work on the route and on structures.

The investigation report does not fully describe conditions that might be encountered on the route, particularly with respect to the rock or other natural materials, nor does it provide other in-depth data and explanations. The Contractor is therefore required to study the report and to make his own conclusions regarding: nature of excavation material, level and difficulty of construction work, excavation support requirements, and the need to realize other works because of specific geological on-site conditions. The Contractor shall bear full responsibility with respect to such conclusions.

For the structures whose mechanical resistance and stability must be reviewed pursuant to the Building Law, this investigation report will be reviewed by a certified reviewer who will also review other parts of the final design that have been prepared on the basis of such report.

If it becomes necessary to perform, following requirements contained in the final design or as specified by the certified reviewer, some additional investigations during actual construction work, the Contractor shall be required to order realization of such work, and shall produce an appropriate report which will form part of the working design.

1.7 BUILDING PERMIT

The building permit is an administrative act issued in accordance with the Building Law by the competent ministry or by a competent public administration office.
The building permit is issued for the entire structure or for some parts of the structure, depending on the previously delivered provisional building permit.

After issuance of the building permit, the structure or a part of the structure may be built in accordance with the final design that has been approved by the authority authorized to deliver building permits.

During on-site establishment of Contractor, the Client will submit to the Contractor the building permit and an approved copy of the final design.

If the Client intends to make same changes or additions to the structure during the realization of the construction work, and if such changes are likely to influence any significant requirements to be met by the

structure, or if such changes do not comply with other laws or regulations or with special requirements, then the Client will be required to obtain a change of or addition to the building permit.

Pursuant to the Building Law, such significant requirements are requirements relating to the mechanical resistance and stability, fire protection, hygiene, health and environment protection, safe use, noise protection, energy conservation and thermal protection.

Significant changes of the structure involving *mechanical resistance and stability* are changes that may cause: collapse of the entire structure or of a portion thereof, inadmissible deformation levels, damage to structural parts and equipment due to deformations in the load-bearing structure, damage disproportionate to the cause of such damage, damage to neighboring structures, and reduced stability of soil in the surrounding terrain.

The Client shall also be required to obtain a new location permit If changes on the structure are such that they prevent compliance with the location permit and special requirements.

If the Contractor, wishing to make savings on the project, proposes change in the final design on the basis of which the building permit has been issued, and if the Client decides to accept such a change, then the Contractor shall be required to prepare or order, at his own expense, the change of the final design, obtain all required approvals and obtain the change of the building permit.

1.8 PROJECT MANAGER

The Project Manager is the person appointed by the Client to check, on the Client's behalf, whether the project is progressing in accordance with the contract.

The Project Manager monitors realization of all activities, from the delivery of the building permit and the start of construction, to the construction work and to the final completion of all works and the delivery of the operating permit.

1.9 SUPERVISING ENGINEER

The Supervising Engineer is the person authorized to perform, on behalf of the Client, expert supervision activities during the construction work, in accordance with an appropriate law, and according to regulations based on the Building Law.

During performance of his expert supervision activities, the Supervising Engineer is required to:

- check compliance of the staked structure with the stakeout report and the final design;
- supervise construction work so that it is compliant, at all times, with the building permit, Building Law and other regulations;
- supervise the quality of works, materials, products and equipment, inspect their compliance with design requirements, and make sure that they are properly backed by appropriate tests and documents;
- organize measures to be taken in case of nonfulfilment of requirements from Item 2 above;

- submit timely information to the Client about all deficiencies or irregularities he has observed during construction;
- the tasks of expert supervision during construction can not be performed by person who is at the same time the Contractor;
- for purposes of final inspection, prepare the final report about realization of the project with all evidence confirming that the structure has been realized in accordance with the Building Law, location permit, building permit, design documents and all applicable technical rules;
- prepare report on the elimination of significant deficiencies that have been observed during the final inspection;
- take active part in the preparation of the final account.

The Supervising Engineer shall also perform other tasks as specified in the contract and in these GTR, and shall protect, in accordance with good engineering and operating practices, the contract and the works, to the benefit and on behalf of the Client.

If several types of works are carried out on a project, the expert supervision tasks will be performed by several Supervising Engineers, each properly qualified in his line of works. In such a case, the design office will nominate the Chief Supervising Engineer. If several design offices take part in expert supervision, then the Client will specify which design office will nominate the Chief Supervising Engineer who will be responsible for the provision of consistent and harmonized expert supervision services on the project.

In case of realization of preservation or other works on a protected cultural monument, the expert supervision services will be provided in accordance with an appropriate law.

1.10 WORKING DESIGNS AND WORKSHOP DRAWINGS

The working design further elaborates the technical solution (final design) for the structure with the objective of fulfilling requirements specified in the final design, or is prepared as a result of additional investigations specified by the certified reviewer during inspection of the final design.

The working design and workshop drawing must be prepared in accordance with the final design, as confirmed by the Chief Designer and Designer.
The working design must be approved by the Client or the Supervising Engineer and, when necessary, by the reviewer.

The working design may be prepared by the Contractor, by an another company authorized for the design work, or by the company that prepared the final design.

The Contractor will organize, at his own expense, preparation of the working design and all necessary workshop drawings which further elaborate details from the final design as required for the fabrication of integral parts of the structure.

1.11 WORK SCHEDULE AND LIST OF EQUIPMENT

Work schedules and the list of equipment are integral parts of the Construction Management Design (CMD).

The work schedule is a detailed representation of duration of individual on-site works in real time frame.

The work schedule must comply with the following requirements:

The schedule covers activities that accurately depict the method according to which the Contractor plans to realize all of its works, and includes assembly of all major construction devices and the supply of principal materials.

The schedule must be elaborated in such detail to enable the Supervising Engineer to harmonize its activities, including design and preparation of working drawings, and the time frame for realization of works. The schedule must also contain the working day calendar.

In the schedule, the duration of each activity is expressed in working days.

The description of each activity will be as detailed as possible to enable easy recognition when looking for a specific portion of works, and will also point to the precise location in which the work is to be performed.

The Contractor is required to submit this schedule to the Supervising Engineer for approval prior to the commencement of works.

The Contractor is required to perform his activities in full compliance with the work schedule.

The list of equipment is a detailed representation of all on-site construction equipment, vehicles and machinery as needed for the realization of work in accordance with the work schedule. This list shall contain the date of delivery, type, size, capacity, power and number of units.

No vehicle, machine or part of equipment figuring on the list shall be allowed to leave the site without the approval of the Supervising Engineer.

The following data will be provided for each piece of equipment, vehicle or machine: model, type, manufacturer, identification number, year of manufacture and present owner. In case of equipment, it should also be indicated whether or not it has been overhauled. This list shall be updated every day by making appropriate entries in the site diary.

1.12 ALTERATIONS TO THE DESIGN, TYPE OF WORK AND QUANTITIES

1.12.1 ALTERATION OF THE DESIGN OR TYPE OF WORK

A design or a type of work may be altered:

1. if it is determined that design solutions do not comply with construction requirements;
2. at the request of the Client (with the consent of the Designer) who proposes another solution which would constitute an extra task;
3. at the request of the Contractor (with the consent of the Client and the Designer) who proposes a solution of similar or better quality but more favorable for the Contractor, without any change in price;

If such change in design will exert a major influence on principal properties of the structure making it necessary to ask for new approvals and/or modifications of the building permit, the proposer of such change shall be required to obtain all required approvals at his own expense prior to the commencement of work.

1.12.2 ALTERATION OF QUANTITIES

Quantities may be altered if some new information is gathered during realization of works, or in case of an extraordinary and unexpected event due to a significant difficulty relating to properties of the terrain, which could not have been foreseen in the final design.

1.13 ADDITIONAL WORK

The Contractor will perform additional work to the required extent, but only if requested to do so by the Supervising Engineer. The Contractor will be recompensed for such work at full rates based on the approved cost breakdown and conditions specified in the contract.

1.14 UNAUTHORIZED WORK

This is the work performed outside of the right-of-way or outside of the scope of the project, as well as any other special work performed without the written approval of the Supervising Engineer. The cost of any such unauthorized work shall be borne by the Contractor.

1.15 MEASUREMENT OF QUANTITIES

Quantities for individual types of works shall be measured in units as defined in appropriate work item descriptions contained in General Technical Requirements. If no item is provided in GRT for a particular work, then the corresponding quantities will be measured in accordance with the final design, and will be approved based on actually realized and proven quantities, unless otherwise provided in the contract.

1.16 ON-SITE ESTABLISHMENT

During on-site establishment of Contractor, the Client will submit to the Contractor one copy of the approved final design on the basis of which the building permit has been issued, and one copy of the design as approved by the Designer and the Chief Designer.

The Client will submit to the Contractor the traverse points. These points have to be marked in an appropriate manner. The Client will also submit to the Contractor the elevation points (temporary bench marks) spaced at approximately 500 m intervals along the route and at every major structure. These points shall also be marked in an appropriate manner. The procedure and the date of this submittal of data shall be entered in the site diary.

The Client will submit to the Contractor, through official protocol, all documents as listed as well as other documents the submittal of which is specified in the contract.

1.17 MATERIALS AND PRODUCTS FOR CONSTRUCTION

All materials and products, regardless of their type and quantity, shall be eligible for approval if they comply with these General Technical Requirements, and if they have been manufactured in accordance with applicable standards and technical regulations.

A construction product may be permanently placed or installed only if its acceptability has been proven in the manner specified in the BL and in other relevant regulations. The construction product is considered suitable for use if its properties comply with essential project requirements as indicated in technical specifications. The Contractor is required to submit to the Client an original copy of the document proving acceptability of any such product.

The acceptability of construction products is proven by estimating compliance of such products with technical specifications, which is evidenced by submitting an original certificate of conformity, or by the manufacturer's statement issued in accordance with the technical regulations or other relevant standards.

Materials not complying with standards specified in the design may still be used if they are found compliant with requirements contained in these GTR. In such a case, the Contractor will submit to the Supervising Engineer one copy of relevant technical regulations within 90 days prior to the start of the work stage to which the regulations are related. After completion of contract work, these documents will become the property of the Client.

1.18 STORAGE AND HANDLING OF MATERIALS

Materials shall be stored in accordance with manufacturer's requirements, provisions contained in appropriate standards, and these General Technical Requirements. Physical and mechanical properties of materials, and other significant properties of materials as required for the placing, must not be altered during storage of such materials.

The way in which materials are handled is specified in appropriate provisions of these General Technical Requirements or in recommendations issued by the manufacturer.

Materials may be stored on the construction site provided that an appropriate evidence of acceptability has been furnished, and that an approval of the Supervising Engineer has been obtained prior to such storage.

Trucks and other vehicles for the transport of construction materials must be kept in good state or repair. They must be clean and free from remains of any other materials, and should have a strong and resistant body and undercarriage, so as to avoid loss of material during transport.

Train wagons, barges and similar vessels that are used for the transport of materials such as aggregates, cement, bituminous materials, etc., must be clean prior to loading.

1.19 QUALITY ASSURANCE FOR MATERIALS, PRODUCTS AND WORKS

1.19.1 GENERAL

The quality assurance comprises a set of systematically planned activities that are undertaken to reach required properties of materials, products and works as defined in these General Technical Requirements, in order to arrive at the level of quality specified for the completed structure.

The final design must contain the Quality Control and Quality Assurance Program (QCQAP) compliant with the technical regulations.

The QCQAP specifies requirements for proving quality of materials, products and works as well as the form of documents that are needed for the final inspection. The QCQAP is subject to the approval of the Supervising Engineer.

1.19.2 MATERIALS, PRODUCTS AND WORKS

The Contractor is required to furnish the proof of acceptability, as specified in the technical regulations, i.e. the certificate based on the ordinance on obligatory certification, for all materials and products that are considered to be of vital significance for the fulfillment of essential design requirements.

This supporting documentation shall be submitted in due course to the Supervising Engineer for approval.

The Supervising Engineer has the right and obligation to check compliance with acceptability requirements through audit tests that have to be carried out in accordance with provisions contained in these GTR.

Materials, products and works for which an acceptability checking procedure has not been established, shall be tested in accordance with these GTR (see following sections in which tests are presented by field). This checking shall include at least the following tests:

(a) **initial tests** (Contractor) conducted to prove acceptability of a tested material.

(b) manufacturer's (Contractor's) tests during production (**control tests**)

(c) **audit tests** for materials, products and works, to be carried out by the Client (Supervising Engineer). They are performed in accordance with an appropriate testing program, using

acceptable statistical methods and taking into account: production tests and visual observation at the location of testing.

The type and scope of the above tests is defined in these GTR. All tests shall be conducted by an accredited laboratory (cf. definition of the "Certification Body") or by a laboratory supervised by an accredited laboratory.

All materials, products and works must be approved by the Supervising Engineer and can not be modified without his approval.

The Contractor is required to grant to the Supervising Engineer free access to production facilities and laboratory so that the latter can perform appropriate checks and/or take samples for audit testing.

The information about the type and scope of work quality checking, as based on data given in these GTR, is presented in the Quality Control and Quality Assurance Program (QCQAP). Procedures defined in this program are subject to the approval of the Supervising Engineer.

A special attention must be paid to the control of works that are significant for the fulfillment of essential project requirements (mechanical resistance and stability, safety in use, fire and noise protection, etc.) as well as to the timely performance of topographic surveys.

In case some materials, products or works deviate from specified quality requirements, the Supervising Engineer may require additional testing and/or remedial actions, which shall be carried out at the Contractor's expense.

In case some materials, products or works significantly deviate from specified quality requirements, the Supervising Engineer shall require removal of such works and their replacement with new materials, products or works that are fully compliant with the quality requirements.

The Client (Supervising Engineer) shall conduct audit tests in accordance with provisions contained in these GTR (cf. following sections in which tests are presented by field) but also on the basis of his own judgment.

The Contractor is required to enable the Supervising Engineer, and/or the person authorized by the Supervising Engineer, to perform, at any time, audit tests, including physical removal of previously laid layers or structures.

1.19.3 LOAD TESTING

The structures that must be subjected to load testing are specified in QCQAP. The load testing is performed by a Certification Body equipped with appropriate instruments and equipment, and staffed with experienced experts. The use of services of such Certification Body is subject to the approval of the Supervising Engineer.

Load testing results are also subject to the approval of the Supervising Engineer. These results form part of the documentation used in the final inspection.

1.19.4 COSTS

Initial tests and control tests shall be conducted at the Contractor's expense.

Audit tests and load tests shall be conducted at the Client's expense. For the load testing, the Contractor shall provide, at the Contractor's expense, all necessary scaffolding, vehicles with cargo, as well as other necessary equipment and labor.

1.20 CONSTRUCTION SITE FACILITIES

1.20.1 GENERAL

The Contractor shall provide and/or build at the construction site, all buildings and facilities as needed by him and by the Client at the locations specified by the Supervising Engineer, in accordance with the Construction Management Design (CMD).

Once he has received the notice to proceed from the Supervising Engineer, the Contractor is required to maintain and repair all existing on site buildings and facilities and this throughout the duration of work supervision activities on the project.

On site buildings and facilities to be used by the Client consist of the main office, audit testing laboratory and personnel housing unit. These facilities must have all necessary infrastructure, such as electricity, telephone, water, access roads, parking lots, drainage, sewerage, etc., unless otherwise provided in the construction contract.

After completion of the contract, all on site buildings and facilities built for the Client, together with furniture, equipment and accessories, shall become the property of the Client.

1.20.2 MATERIALS

All materials to be used on the site shall be materials as specified in the CMD and drawings, and materials that have been approved by the Supervising Engineer.

1.20.3 PREPARATIONS

The Contractor shall provide, assemble or build buildings for him and for the Client, in accordance with the CMD. The Contractor is required to perform all cleaning, leveling and backfilling as needed for roads, foundations of buildings and parking lots, and is furthermore required to build an appropriate sewerage and site drainage systems in accordance with the Client's instructions and approval, and this on the land assigned to him.

1.20.4 SITE BUILDINGS

On site structures, buildings and huts must be stable, proper and freshly painted, and their surroundings must be properly arranged and cleaned. All painting and coating work must be durable, i.e. it must not show signs of damage or discoloration during the construction time.

The list of paints and coating products must be submitted to the Supervising Engineer for approval prior to the

commencement of works.

1.20.5 ACCESS ROADS AND PARKING LOTS

The existing access roads and parking lots must be realized in accordance with the CMD, according to Supervising Engineer's instructions, or as specified in the contract.

The access roads and parking lots must be properly and regularly maintained. Maintenance activities shall be performed by the Contractor. Maintenance costs are included in the total construction price, unless otherwise specified in the construction contract.

1.20.6 UTILITY APPURTENANCES - ELECTRICITY

The alternating power 220/240 V will be used. It shall be supplied 24 hours a day and shall be sufficient for meeting needs and requirements of all equipment and facilities. As a rule, electricity connections will be made to the external public network and, if that is not possible, the Contractor will supply electricity from his sources.

The Contractor is responsible for the maintenance of the entire electricity network, including *inter alia* maintenance of power generators, distribution boxes, switches, ventilators and air conditioners.

Drinking water, water distribution and plumbing works

The Contractor will maintain the existing central water tank and will provide for the round-the-clock supply of drinking water to all on site facilities. This also includes maintenance of water distribution line running from the central tank to all on site facilities, as well as maintenance of sanitary piping, cold water tanks in the facilities, plants, accessories, etc.

Sewage disposal

Sewage disposal facilities such as septic tanks and piping systems shall be maintained by the Contractor and shall always be kept in good state of repair.

Furniture and additional equipment

The furniture and additional equipment or accessories mentioned in the cost estimate and approved by the Supervising Engineer shall be delivered to the site.

1.20.7 DAILY CLEANING AND PROTECTION

The Contractor shall provide for the daily cleaning of all on site facilities and structures.

The Contractor shall organize a round-the-clock watchman service in keeping with the Building Law.

1.20.8 MAINTENANCE

The Contractor shall maintain all existing structures, buildings and facilities. The Contractor shall provide all necessary labor, materials, spare parts and replacement elements for all facilities and equipment.

Calculation of work and payment

The fabrication, supply, erection and maintenance of buildings, structures, equipment, devices, vehicles and infrastructures as required on the site, the work of the Project Manager, Supervising Engineers or Client, are all included in the total price of the construction work and will not be subject to separate calculation and payment, unless otherwise provided for in the contract.

Possible replacement of materials, including furniture, devices, computer hardware, water, electricity, all labor, tools and equipment, payment to local institutions, and overhead and incidental expenses, are also considered to be cost items to be borne by the Contractor and are included in the total price of construction work, unless otherwise provided for in the contract.

1.21 PROJECT MANAGER'S AND SUPERVISING ENGINEER'S OFFICE

The Contractor is required to provide or build a main office building (one building) for the Project Manager and the Supervising Engineer. The size and location will be specified in the Construction Management Design (CMD).

As a minimum requirement, the main office building will consist of the Project Manager's office, a larger conference room and an office for the Supervising Engineer. The building must have all necessary equipment and infrastructure connections such as electricity, telephone/fax, water and toilet facilities, approach roads, parking lot, drainage and sewage disposal system, etc., in accordance with the list to be approved by the Project Manager or the Supervising Engineer.

Once he receives the notice to proceed from the Supervising Engineer, the Contractor shall be required to maintain and keep in good state of repair the main office building, its equipment and devices, and this throughout the duration of the construction supervision activities.

If required by the contract, the Contractor will ensure transportation for the Project Manager and his personnel and this by providing them with new and safe passenger cars throughout the duration of the contract. The vehicles must be registered in the Republic of Albania.

The Contractor will provide for the regular maintenance of the vehicles, as well as for the fuel, oil and spare parts. In case a vehicle is lost, destroyed or damaged, the Contractor will be required to provide an another vehicle in the same quality range.

Vehicles assigned to the Project Manager will be used by him throughout the duration of the contract, after which the vehicles will be assigned to the Client.

1.22 ONSITE FACILITIES FOR LABORATORY, EMPLOYER'S PERSONNEL AND SUPERVISING ENGINEERS

Onsite facilities for the accommodation of audit testing laboratories, Client's personnel and Supervising Engineers must occupy an optimum space, compliant with the scope and type of work, as shown in the CMD drawings.

All buildings and facilities must be equipped as specified in the list approved by the Supervising Engineer, unless otherwise provided for in the contract.

Buildings must have all appropriate infrastructure such as electricity, telephone/fax connections, water, shower and toilet facilities, access roads, parking lot, drainage and sewage disposal system, etc.

1.23 SURVEYING AND LABORATORY EQUIPMENT AND REQUIRED LABOUR

1.23.1 SURVEYING EQUIPMENT

The Contractor shall submit a list of surveying equipment to be used by him on the project not later than one month following the issuance of the notice to proceed by the Supervising Engineer.

The Contractor shall provide all necessary labor for his own use and for the use of the Supervising Engineer.

The Supervising Engineer shall provide topographical surveying equipment to be used for control surveys.

1.23.2 LABORATORY EQUIPMENT

Within one month after notice to proceed has been issued by the Supervising Engineer, and after approval of the list of laboratory equipment for the start of work, the Contractor shall supply laboratory equipment for his own testing of materials, products and works.

If the Contractor does not own an accredited laboratory, he may engage, at his own expense, an appropriate accredited laboratory, subject to prior approval of the Supervising Engineer.

The Supervising Engineer shall provide all laboratory equipment that is required for the realization of audit tests.

1.23.3 PROVISION OF GENERAL LABOR

Throughout the duration of the contract, the Contractor will provide general labor, on the temporary or permanent basis, and without additional charge, as an assistance to the Supervising Engineer in the performance of audit tests for materials, products and works, and in topographical surveying activities.

1.23.4 MAINTENANCE OF SURVEYING AND LABORATORY EQUIPMENT

The Contractor will maintain his surveying and laboratory equipment and will, in that respect, provide for regular servicing and, if necessary, calibration of such equipment.

The Supervising Engineer is responsible for the servicing and calibration of the surveying and laboratory equipment that is used for audit testing.

If such equipment is out of working order due to a breakdown, or if it has not been calibrated on time, the equipment will have to be replaced within 24 hours, or the works controlled by such equipment will be stopped.

1.24 TEMPORARY TRAFFIC SIGNS

Description of work

The Contractor is required to take complete and sufficient measures and actions in order to ensure safe and unhindered traffic at site entrances, at the site itself, at all plants used in the realization of works, in the surrounding area influenced by the traffic to and from the construction site, at intersections with other roadways, and at detours made because of the construction work on the project.

Activities

The Contractor is required to place and maintain an appropriate number of traffic signs, of suitable form and technical properties, both at the site and at other required locations, in full accordance with the progress of works and as required by competent authorities.

As a rule, vehicles and machines entering and leaving the site should perform such entering/leaving maneuvers by driving forward only.

Whenever necessary during realization of works, the Contractor will have to supply and maintain the temporary road lighting. The temporary lighting must provide the same level of light as the public lighting it replaces. The temporary lighting must be supplied and approved prior to the removal of the existing public lighting.

The marking and lighting for the construction site itself, i.e. for excavations and crosscuts, will be provided subject to the prior approval of the Supervising Engineer.

Calculation of work and payment

No separate calculation and payment will be made as the work is included in the total price of construction.

1.25 TRAFFIC CONTROL

Description of work

In case a special regulation of traffic is required, e.g. at intersection with other roadways, when one half of the road is under construction, in case of alternating one way traffic, etc., on a portion of the project or on approaches to the project or to the site, the Contractor shall provide for the safe operation of traffic, including an appropriate traffic control, all based on prior approval of the Supervising Engineer.

Activities

If forced to restrict traffic due to works on the project, The Contractor is required to maintain safe flow of traffic in the width of at least 3 m for one-way traffic. At the request of the Supervising Engineer, he will provide illuminated traffic signs (traffic lights) for the control of traffic on such sections, as well as other suitable traffic signs. The number, appearance and technical properties of such signs must be in conformance with requirements issued by competent authorities.

Illuminated traffic signs (traffic lights) will be automatic but may also be operated manually if this is requested or approved by the Supervising Engineer. The Contractor is required to take appropriate measures to enable rapid servicing of illuminated traffic signs at any hour.

The Contractor shall submit to the Supervising Engineer for approval a written notice about the planned start of one-way traffic at least 14 days prior to start of such traffic.

In case a work is to be performed on a public road, the Contractor will have to obtain a prior approval from competent institutions and, whenever required, will ask that the traffic be regulated by the Ministry of the Interior.

Calculation of work and payment

No separate calculation and payment will be made as the work is included in the total price of construction.

1.26 MAINTENANCE OF EXISTING ROADS, SIDEWALKS AND BIKE PATHS

Description of work

Immediately following his establishment on the construction site, the Contractor will become responsible for the maintenance of the existing roads, sidewalks and bike paths that are linked to the construction site.

Activities

Prior to the commencement of work, the Contractor is required to examine condition of all roads, sidewalks and bike paths that are linked to the construction site. The results of such examination must be made available to the Supervising Engineer.

In case access roads have been specified in the contract, the Contractor will not be allowed to use any other roads without approval of the Supervising Engineer.

The Contractor is required to maintain the existing roads, sidewalks and bike paths that are used as access to the site or are negatively influenced by construction work on the project.

The Contractor is required to maintain safe traffic on such roads, and shall in this respect make continuous

efforts to avoid any damage that could jeopardize in any way human lives, cause vehicle damage and provoke deterioration of principal properties of the existing roadways.

All roads used by vehicles owned by the Contractor, Subcontractors and suppliers must be cleaned on a daily basis, and shall in this respect be kept free of mud, earth or other material generated by construction work on the project.

Unless otherwise specified in the contract, the Contractor will have to obtain, maintain and use all appropriate equipment, including mechanical road cleaners, throughout the duration of the contract, and this on the locations and in the way as agreed with the competent road authority. The Contractor must obtain, maintain and use wheeled washing devices and high-pressure washing devices, both on the construction site and on other locations, as required by the said competent road authority.

Each portion of public road closed to traffic because of the works must not be reopened to traffic until appropriate safety and traffic measures have been taken and until Supervising Engineer has confirmed that the road is in condition suitable for public use.

After completion of works on the construction site, the Contractor will be required to bring all roads, sidewalks and bicycle paths, and all portions of the surface drainage system, to the condition that is at least equal to the condition prevailing prior to the performance of works.

The Contractor will be responsible for the regular inspection of such roadways and will, if required to do so by the Supervising Engineer, place temporary layer the thickness of which will be in accordance with the Supervising Engineer's instructions.

The Contractor is required to provide at all times an undisturbed access for fire fighting services, medical services and other similar services and shall, in this respect, maintain an appropriate contact with such services.

The Contractor is required to enable free access to construction site to every authorized representative of utility companies and must in this respect allow performance of urgent works on any utility or installation situated within the construction site.

The Contractor must not use public or private rights of access for the disposal or storage of his installations or materials. The Contractor is required to constantly maintain in clean, passable and safe condition the portions of public or private areas within the right-of-way that are temporarily not used for the performance of the works.
During performance of the works, the Contractor must ensure that a safe access to all properties is enabled to pedestrians, including disabled persons. Nothing contained in construction methods or in the program of work shall prevent access of vehicles to neighboring properties.

All traffic safety measures relating to the performance of the works must be fully operative before the Contractor is allowed to commence any work affecting the public road.

Calculation of work and payment

No separate calculation and payment will be made as the work is included in the total price of construction.

1.27 TEMPORARY DIVERSION OF TRAFFIC

Description of work

Temporary diversion of traffic will be made at points where the structure or the site intersects the existing roads, crossroads, pedestrian or bike paths, or some portions thereof, and where satisfactory traffic can not be maintained for safety reasons of because of the scope of construction work.

Activities

In case the structure affects the traffic in a wider area, or if it affects a greater number of mutually connected roads, as well as in case of major roads or roads of higher rank, the Client is required to provide for the preparation of the design for the temporary regulation of traffic, and to obtain all necessary approvals from competent institutions.

In all other cases, the Contractor is required to obtain all necessary approvals from competent institutions with respect to the temporary diversion of traffic on public roads.

Where the design calls for intersection with existing unclassified roads and intersection with routes providing access to neighboring facilities, the Contractor is required to develop alternative solutions, which will be subject to the approval of the Supervising Engineer only.

The written notice and proposed solution shall be submitted to the Supervising Engineer for approval at least 14 days in advance.

The Contractor is required to realize the routes (detours) that will be temporarily used for the operation of traffic in keeping with applicable standards, taking at that into account the category of the roadway. The Contractor is also required to provide for the
safe operation of traffic during realization of construction work. After completion of works, the Contractor will be required to remove such temporary detours.

All works and activities must be performed in accordance with the Building Law, Law on the Road Traffic Safety, Law on Public Roads, an in keeping with other applicable laws and regulations.

Calculation of work and payment

No separate calculation and payment will be made as the work is included in the total price of construction.

1.28 INTERSECTION WITH OTHER ROADS, CROSSROADS AND PATHS

Description of work

The Contractor is required to provide for the safe operation of traffic and works at points where the structure or the site intersects the existing roads, existing crossroads, pedestrian paths and bike paths, or any portions thereof.

Activities

In areas where, according to the Supervising Engineer's opinion, the detour of traffic is impossible or unnecessary, the work will be carried out simultaneously with the operation of traffic on the existing roadways intersected by the construction site. The Contractor is required to obtain necessary approvals from competent authorities and provide for the safe operation of traffic, and for the safety of persons employed on the construction site.

The area in which works are realized must be physically separated from the area in which traffic is operated.

The written notice and the proposed solution shall be submitted to the Supervising Engineer at least 14 days in advance.

Calculation of work and payment

No separate calculation and payment will be made as the work is included in the total price of construction.

1.29 CONSTRUCTION ON ONE HALF OF THE ROAD PAVEMENT WIDTH

Description of work

In areas where, in the Supervising Engineer's opinion, the detour of traffic is not possible, the works will be performed on existing public roads on one half of the road width only.

Activities

The work on one half of the traveled way shall be carried out as rapidly as practicable and, at that, all necessary safety and protection measures will be taken.

On facilities where the works are carried out on one half of pavement width, the work must be completed, and embankments next to such work must be realized, in such a

way that the traffic can be operated on at least one half of the full pavement width prior to commencement of work on the other half of the road.

The area in which works are realized must be physically separated from the area in which traffic is operated.

The written notice and the proposed solution shall be submitted to the Supervising Engineer at least 14 days in advance.

Calculation of work and payment

No separate calculation and payment will be made as the work is included in the total price of construction.

1.30 TEMPORARY STRUCTURES

Description of work

The Contractor is responsible for the design, specifications, construction and subsequent removal of all temporary structures that are necessary for realization of the works.

Activities

Prior to the start of work on any portion of the temporary structure, the Contractor is required to submit to the Supervising Engineer the design documentation (the design) with all drawings and, if necessary, with all calculations required for that portion of the temporary structure. In areas where the temporary structure is in immediate contact with any portion of the permanent structure, the drawings and calculations must clearly present the relationship, and must illustrate the sequence of assembly work and the loads and stresses exerted on the permanent structure or originating from the permanent structure.

The required design will be submitted to the Supervising Engineer within a reasonable period of time prior to the planned commencement of assembly or fabrication of the temporary structure. When planning to build a temporary structure the Contractor must take into account the time needed for submitting proposal for the erection of a temporary structure, for the review and possible changes required by the Supervising Engineer, for subsequent submittal and review by the Supervising Engineer, and the time for final approval of the design for such temporary structure.

The act of submitting to the Supervising Engineer the drawings and calculations forming part of the temporary structure design shall not relieve the Contractor from any of its responsibilities and obligations specified in the contract in relation to the realization of temporary structures.

Calculation of work and payment

The costs relating to temporary structures shall be considered, unless otherwise expressly provided for in the contract, as included in the cost of the work for the permanent structures so that no additional payment will be made for such works.

1.31 ROAD TRAFFIC OPERATION AND PROTECTION

The Contractor is required to ensure operation of traffic on all existing roads during realization of works, or to divert the traffic in accordance with the prevailing laws and regulations.

The Contractor shall take measures to provide for the safety and comfort of all persons residing next to the construction site.

Any failure of the Contractor to perform such works will constitute adequate grounds for provision of the same services by the Supervising Engineer at the full expense of the Contractor, and the corresponding amount shall be deducted from the sums due for payment to the Contractor in accordance with the contract.

Calculation of work and payment

No separate calculation and payment will be made as the work is included in the total price of construction.

1.32 RIGHT-OF-WAY LIMITS

After land acquisition, the land shall become the property of the Client - user of the right-of-way. Following the full land acquisition, the former owner shall lose his ownership rights as well as other rights related to this property. The full land acquisition comprises buildings and other structures situated on this land. The land acquisition plan shall be submitted by the Client to the Contractor and the latter shall be required to perform all construction activities within the right-of-way limits.

All activities and expenses incurred by the Contractor outside of the right-of-way limits shall not constitute an obligation for the Client, unless otherwise specified by the Client or the Supervising Engineer.

The neighboring land needed for the accommodation of labor, for the storage of materials and machines, and for anything else that might be needed for the construction of structures and realization of works considered to be of national interest, may be temporarily occupied by the project. Such temporary dispossession of land shall be terminated once such temporary use is no longer necessary, or after completion of principal works on the project.

Provisions of the Building Law in relation to the dispossession of property are also applicable to the temporary dispossession of land, unless otherwise specified in appropriate provisions of this law.

1.33 FINAL INSPECTION

1. The final inspection is performed to determine whether the structure has been constructed in accordance with the building permit, i.e. location permit and technical requirements for individual structures.
2. The final inspection is carried out by the commission formed by an appropriate building authority.
3. The building authority nominates the commission president and determines which bodies and legal persons will nominate their representatives as members of the commission.
4. The commission is formed of competent employees of the building authority and of representatives of public administration services and legal persons that have issued special requirements and approvals, or other public administration services and legal persons as determined by the building authority.
5. The building authority shall inform the Client about the venue, date and hour of such final inspection. The Client is required to invite appropriate participants in the construction work to the final inspection.
6. The building authority is required to perform the final inspection of the structure/facility within the period specified by law.
7. Findings made during final inspection are recorded in minutes in which commission members can state either that the structure is fit for use, or that it will be fit for use after elimination of some deficiencies, or that the operating permit can not be issued for the structure.
8. After the final inspection is completed, the president of the final inspection commission, i.e. the expert that performed the final inspection is required to submit the corresponding minutes to the building authority.

1.34 BUILDING INSPECTION

The building inspection operating in the scope of the competent ministry - Administration for Inspections - controls the application of the BL and other regulations relating to the construction work and use of structures.

The building inspection supervises the work of the Client and other participants in the construction. This supervision is performed to ensure proper application of the Building Law, technical regulations and relevant standards.

The inspection work in the sense of these Regulations is performed by a Senior Building Inspector, Building Inspector and building supervisor during construction, removal and maintenance of structures.

The Building Inspector is required to perform, during every construction work, the inspection of the works. The inspection may cover construction, removal or maintenance of the entire structure/works or any part thereof.

The frequency of such inspections is defined by the inspector depending on the nature and properties of the structure or the works.

In case the inspector or supervisor determines during such inspection that the construction work has been started without the required permit or design, he will proceed to the determination of the facts in relation to participants in construction and safety of construction work.

In the course of the first inspection the inspector will determine facts with respect to the legality of construction, identify participants in construction work, establish the time the construction started and the condition on the building site and the works.

In every subsequent inspection, the inspector will determine changes that occurred with respect to the facts established during the previous inspection.

If the inspector finds that the technical regulations have been violated, he will take appropriate measures to:

- eliminate the irregularities,
- eliminate the deficiencies,
- eliminate the damage,
- stop the construction work, or stop construction on a portion of the work,
- remove the structure or a part thereof or restore the conditions existing prior to such construction,
- close the construction site,
- protect the site until execution of the order (evacuate people and material goods, backfill the foundation pit, erect props, etc.)

In case of violation of the technical regulations, the inspector and supervisor will bring charges against participants in construction that have been found responsible for such violation.

The Contractor and the Supervising Engineer are required to present to the inspection officers all documents, show them the works, and provide full assistance in their inspection work.

1.35 TECHNICAL REGULATIONS

Road Design, Tunnel Design and Structures Design are based on the following technical regulations, normatives and codes:

1- **Albanian Road Design Manual (ARDM) According to the Ministerial Council Decision No 628 of 15 July 2015 "Approval of technical rules for road design and construction"**

2- **Eurocodes :**

- Eurocode 0: Basis of structural design (EN 1990)
- Eurocode 1: Actions on structures (EN 1991)
  - Part 1-1: Densities, self-weight, imposed loads for buildings (EN 1991-1-1)
  - Part 1-2: Actions on structures exposed to fire (EN 1991-1-2)
  - Part 1-3: General actions - Snow loads (EN 1991-1-3)
  - Part 1-4: General actions - Wind actions (EN 1991-1-4)
  - Part 1-5: General actions - Thermal actions (EN 1991-1-5)
  - Part 1-6: General actions - Actions during execution (EN 1991-1-6)
  - Part 1-7: General actions - Accidental Actions (EN 1991-1-7)
  - Part 2: Traffic loads on bridges (EN 1991-2)
  - Part 3: Actions induced by cranes and machinery (EN 1991-3)
  - Part 4 : Silos and tanks (EN 1991-4)

- Eurocode 2: Design of concrete structures (EN 1992)
  - Part 1-1: General rules, and rules for buildings (EN 1992-1-1)
  - Part 1-2: Structural fire design (EN 1992-1-2)
  - Part 1-3: Precast Concrete Elements and Structures (EN 1992-1-3)
  - Part 1-4: Lightweight aggregate concrete with closed structure (EN 1992-1-4)
  - Part 1-5: Structures with unbonded and external prestressing tendons (EN 1992-1-5)
  - Part 1-6: Plain concrete structures (EN 1992-1-6)
  - Part 2: Reinforced and prestressed concrete bridges (EN 1992-2)
  - Part 3: Liquid retaining and containing structures (EN 1992-3)
  - Part 4: Design of fastenings for use in concrete (EN 1992-4)

- Eurocode 3: Design of steel structures (EN 1993)
  - Part 1-1: General rules and rules for buildings (EN 1993-1-1)
  - Part 1-2: General rules - Structural fire design (EN 1993-1-2)
  - Part 1-3: General rules - Supplementary rules for cold-formed members and sheeting (EN 1993-1-3)
  - Part 1-4: General rules - Supplementary rules for stainless steels (EN 1993-1-4)
  - Part 1-5: Plated structural elements (EN 1993-1-5)
  - Part 1-6: Strength and Stability of Shell Structures (EN 1993-1-6)
  - Part 1-7: General Rules - Supplementary rules for planar plated structural elements with out of plane loading (EN 1993-1-7)
  - Part 1-8: Design of joints (EN 1993-1-8)
  - Part 1-9: Fatigue (EN 1993-1-9)
  - Part 1-10: Material Toughness and through-thickness properties (EN 1993-1-10)

Part 1-11: Design of Structures with tension components (EN 1993-1-11)
Part 1-12: High Strength steels (EN 1993-1-12)
Part 2: Steel Bridges (EN 1993-2)
Part 3-1: Towers, masts and chimneys (EN 1993-3-1)
Part 3-2: Towers, masts and chimneys - Chimneys (EN 1993-3-2)
Part 4-1: Silos (EN 1993-4-1)
Part 4-2: Tanks (EN 1993-4-2)
Part 4-3: Pipelines (EN 1993-4-3)
Part 5: Piling (EN 1993-5)
Part 6: Crane supporting structures (EN 1993-6)

- Eurocode 4: Design of composite steel and concrete structures (EN 1994)
  Part 1-1: General rules and rules for buildings (EN 1994-1-1)
  Part 1-2: Structural fire design (EN 1994-1-2)
  Part 2: General rules and rules for bridges (EN 1994-2)

- Eurocode 5: Design of timber structures (EN 1995)
  Part 1-1: General – Common rules and rules for buildings (EN 1995-1-1)
  Part 1-2: General – Structural fire design (EN 1995-1-2)
  Part 2: Bridges (EN 1995-2)

- Eurocode 6: Design of masonry structures (EN 1996)
  Part 1-1: General – Rules for reinforced and unreinforced masonry structures (EN 1996-1-1)
  Part 1-2: General rules – Structural fire design (EN 1996-1-2)
  Part 2: Design, selection of materials and execution of masonry (EN 1996-2)
  Part 3: Simplified calculation methods for unreinforced masonry structures (EN 1996-3)

- Eurocode 7: Geotechnical design (EN 1997)

Part 1: General rules (EN 1997-1)
Part 2: Ground investigation and testing (EN 1997-2)
Part 3: Design assisted by field testing (EN 1997-3)

- Eurocode 8: Design of structures for earthquake resistance (EN 1998)
  Part 1: General rules, seismic actions and rules for buildings (EN 1998-1)
  Part 2: Bridges (EN 1998-2)
  Part 3: Assessment and retrofitting of buildings (EN 1998-3)
  Part 4: Silos, tanks and pipelines (EN 1998-4)
  Part 5: Foundations, retaining structures and geotechnical aspects (EN 1998-5)
  Part 6: Towers, masts and chimneys (EN 1998-6)

- Eurocode 9: Design of aluminium structures (EN 1999)
  Part 1-1: General structural rules (EN 1999-1-1)
  Part 1-2: Structural fire design (EN 1999-1-2)
  Part 1-3: Structures susceptible to fatigue (EN 1999-1-3)
  Part 1-4: Cold-formed structural sheeting (EN 1999-1-4)

Part 1-5: Shell structures (EN 1999-1-5)

3- ASTM (American Society for Testing and Materials)
4- AASHTO (American Association of State Highway and Transportation Officials)

2. PRELIMINARY WORKS

2.1 GENERAL

This section contains minimum quality requirements for materials, products and works as applied during realization of preliminary work. The GTR are written in such a way that they form a part of the contract while requirements relating to special works are included in the contract as Special Technical Requirements (STR).

Materials, products, equipment and works must comply with standards and technical regulations specified in the design documentation. If no standard is specified, then an appropriate EN (European standard) must be applied. If a standard or regulation becomes invalid during realization of the project, it will be substituted by an appropriate replacement standard or regulation.

The Contractor may propose application of generally recognized technical rules (standards) issued by a foreign standardization body (such as ISO, EN, DIN, ASTM, etc.) provided that a written explanation is given and that the proposal has been approved by the Supervising Engineer. This change may be granted by the Supervising Engineer subject to the approval of the Designer. The Contractor is required to register this change in the working design.

2.1.1 DEFINITIONS

General terms and expressions, with the meanings they have in these General Technical Requirements, are presented in Section 1. The following terms are additional terms that are especially relevant to this section.

Construction Management Design is a combined technical and economic report in which the organization and technology of construction process are defined.

Preliminary work comprises all activities, as specified in the Construction Management Design, that are necessary for the preparation and organization of site and for preparation of principal construction and other work.

As-built survey is an all-comprising topographical report showing the structure's final position in space.

Coordinates are numerical data representing points used in the topographic measurement system applied on the project.

Utilities are overhead and buried lines for the electricity, telephone, gas, heat, water and drainage.

Cultural monument is a structure protected by an appropriate law and registered in the register of cultural and architectural monuments and in other national heritage records.

2.1.2 PREPARATIONS FOR CONSTRUCTION

According to the accepted concept for the organization of work on construction projects, all activities needed for the completion of construction work within the specified time frame, in compliance with applicable laws and regulations, and according to economic and financial conditions specified in the contract, must be

anticipated and planned prior to the commencement of construction work.

Because of the extent of work, length of construction process, participation of a great number of subjects, and specific features encountered on every project, the preparations for construction work are considered to be a demanding and highly significant activity. Taking this into account, it is first of all necessary to prepare an appropriate Construction Management Design (CMD).

The Construction Management Design is prepared by the Contractor in the form as specified by the Project Manager or the Supervising Engineer. The Construction Management Design must be prepared for every construction "project", as defined, regardless of its type, size and construction time.

The basic objective of the Construction Management Design is to examine and solve various organizational, technological and economical issues encountered in the construction process. All data of consequence to the construction must be available as a basis for preparation of such design, and it must be specified that the works shall be carried out without disturbance, under the best possible conditions, and that they must be completed within the prescribed time.

The CMD must contain the following information:

- data about organization and technology of construction,
- working design for the previous work, for preliminary work and for the site infrastructure,
- general construction schedule with requirements concerning the labor, equipment, power supply and materials,
- financial plan,
- safety-at-work reports, and
- special appendices.

Preparation

The Construction Management Design shall be prepared by the Contractor. After having accepted the Construction Management Design, the Client or the Supervising Engineer shall approve the commencement of the work, by making an appropriate entry in the site diary.

2.1.3 SEQUENCE OF ACTIVITIES FOR PREPARATION OF THE CONSTRUCTION MANAGEMENT DESIGN

Description of work

The methodology used in the preparation of the Construction Management Design calls for gradual preparation and treatment of individual portions, in accordance with the predetermined sequence of activities.

Analyzed and selected elements are put together so as to enable development of the following portions of the design, provided always that optimum conditions must be ensured for the performance of individual work stages and the overall work.

The CMD will be prepared in the following order:

1. collect and analyse existing data (plans, reports, etc. regarding the climate, meteorology, geology, soil mechanics, topography, etc.);
2. produce solution for external transport with the general layout of locations were materials can be found, with the system of transport and with all necessary data and calculations regarding the cost of materials, transport and other expenses;
3. produce design and solution for the supply of basic and accessory materials, energy and water;
4. establish appropriate solutions for existing facilities:

- relocation of existing roads, utilities, etc.
- demolition of existing structures,
- diversion of watercourses,
- construction of temporary bridges, access tunnels, etc.;

5. select most favorable solutions (technologies, technological processes, etc.);
6. select equipment complying with specified technological processes, based on the analysis of requirements, costs and optimization parameters;
7. analyze staff requirements, present staff by type and qualification;
8. prepare work progress schedules and determine resources required on the project (labor, equipment, means of transport, materials, energy, etc.);
9. produce preliminary work design:

- temporary roads,
- temporary site camp,
- infrastructure and other on-site facilities and areas;

10. produce financial plan, time schedule of investments, etc.;
11. establish management and administration schedule (division into organizational units, sites, sectors, sections, etc.;
12. establish site layout showing individual capacities and including technological process presentation;
13. provide safety at work requirements and other requirements as needed for the realization of the works;
14. establish necessary plans, details and descriptions;
15. establish necessary schedules for scaffolding, forms, etc.; and
16. prepare technical reports.

Calculation of work and payment

The Contractor shall prepare the Construction Management Design in order to prove his technical and technological capacity to perform the work within the specified time frame. This work is not calculated or paid for separately, as it is included in the total cost of construction.

2.2 TOPOGRAPHIC SURVEY

Topographic works as performed in the scope of road construction projects include the following activities:

- staking out the road axis and all structures within the road and across the road;
- all measurements relating to the transfer of data from design documents to the site and vice versa;
- maintenance of construction layout stakes from the commencement of work to the final acceptance and handover of all work to the Client; and
- as-built survey.

These activities include acceptance-related activities as well as maintenance of all basic topographic data and plans that have been submitted by the Client to the Contractor at the beginning of the works.

The Contractor is required to submit the program of topographic surveys to the Supervising Engineer for approval.

The Supervising Engineer has to be promptly informed about realization of the program, and is entitled to inspect all Contractor's documents.

The scope of these activities must be fully compliant with the requirements concerning construction work, control work, calculations, and other activities arising from the realization of the works.

Unless otherwise specified in the contract and cost estimate, the topographic works shall be included in unit prices.

2.2.1 STAKEOUT OF THE ROUTE AND STRUCTURES

Description of work

The stakeout of the route and structures includes all topographic measurements whereby data are transferred from design documents to the site or from the site into design documents, protection of the staked center line of the route, profiling, rehabilitation and maintenance of staked markers throughout the construction time, i.e. until acceptance and handover of the works to the Client.

The Contractor will stake out the center line in accordance with numerical data from the design (along the center of the road and/or pavement edges and, in case of the motorway, along the center line of the median or center line of individual pavements) at intervals depending on characteristics of the terrain but not exceeding 50 m.

Cross sections from the design will be harmonized with the actual situation on the construction site, and will be subject to the approval of the Supervising Engineer.

At the Contractor's request, additional cross sections (intermediate stations) may also be added.

Entry slip roads and exit slip roads shall be staked along the edge of acceleration or deceleration lanes, or along the center line of such entry or exit slip roads.

The Supervising Engineer shall submit to the Contractor traverse lines of the applicable traverse, as adequately fixed in accordance with the terrain in which they are situated. The traverse system has to be linked to the trigonometric network as calculated in the applicable national-level coordinate system, with tolerance values as defined in the Bylaw on traverse networks of first order.

The Supervising Engineer shall also submit to the Contractor bench marks spaced along the route at about 1000 m intervals (in case of motorways, 500 m intervals are applied) and at every larger structure. The bench marks must be placed on solid ground, cut into stone, or fixed to some other stable object, and will be marked with red water-resistant paint.

During acceptance and handover of the route, the Client will submit to the Contractor the following drawings of the route:

a) Layout plan on the scale of 1:1000 (1:2000, or on an another scale) with the marked center line, position of route elements and elements of drainage facilities until evacuation into the final discharge zone. The layout plan also contains links between principal points of the route and the applicable traverse, as well as all necessary setting data.

b) Calculation of principal points or, in case of electronic calculations, coordinates of principal and detailed points of center lines and profiles as related to stations, lengths of transition lines, circular arches, coordinates of the centers of circular arches, lengths of tangents to points of intersection with corresponding direction angles.

c) List of traverse points - or points of intersection with coordinates, including positioning data for such points.

d) List of bench marks - with elevations and positioning data for such bench marks.

e) Sketch/drawing with the position of traverse (and trigonometric) and elevation points.

f) Pavement elevations at least on every cross section of the route that has been defined in the design, including also level lines, bench marks at the beginning, in the middle and at the end of vertical curves, radii of curvature, longitudinal grades, information about the start and end of pavement screwing and widening, with appropriate pavement cross-slope information.

Depending on the type of structure and terrain conditions, some other topographic methods may also be used for structures that are being relocated because of road construction, i.e. for small-scale road diversions, creek regulation activities, etc., provided that the Contractor is capable of performing the works in accordance with the design and these General Technical Requirements.

In case of construction of bigger structures, the Client will submit to the Contractor previously prepared topographic data as needed for the stakeout of such structures. This is necessary in case of tunnels, viaducts and bridges, i.e. for all structures where higher staking accuracy is needed for safety and economic reasons (tunnels of more than 200 m in length, viaducts, bridges, overpasses and underpasses that the realized by assembly of prefabricated girders, bridges founded on piles, longer retaining walls made of precast elements, etc.).

The Supervising Engineer will closely check all topographic surveys made by the Contractor.

2.2.2 PRESERVATION OF THE STAKED CENTRE LINE

The Contractor is required to preserve his stakes, in an appropriate manner, throughout the progress of the works. The stakes must be placed at sufficient distance from the edge of embankment or cutting, and must be protected and maintained in good condition until the end of construction. The stakes must be protected by double leveling.

In addition to the center line, the Contractor will also need to protect traverse points and bench marks using methods similar to the ones applied for center line protection.

During these tranverse-point protection activities, the Contractor will have to keep an appropriate record with the sketch of protected points, and will subsequently have to prepare the protection drawing. The Contractor will submit one copy of such protection drawing to the Supervising Engineer so that the latter can check correctness of the procedure applied by the Contractor.

2.2.3 ROAD PROFILE SURVEY AND PROTECTION

Prior to the commencement of earthwork, the Contractor will have to place road profile stations in keeping with cross sections presented in the design. Places in cross section where the road profile cuts into the terrain must be determined by calculation.

Stations are set depending on terrain conditions, works (excavation, embankment, walls) and work method used, at every 5 to 50 meter intervals. The Supervising Engineer may also require setting of additional intermediate stations. If the terrain is inclined, the profile will be set without the top soil and without the vertical curvature at top of the slope in cutting or at foot of an embankment.

If unsatisfied with cross sections presented in final design, the Contractor is entitled to reset them by leveling or tachometer, and present them on the scale of 1:100, i.e. on the scale equal to that given in the design. The Contractor shall draw the Supervising Engineer's attention to any difference he may have identified, in order to obtain an appropriate consent and approval. If the morphology of the terrain between cross sections presented in the final design is such that it is likely to significantly affect calculation of quantities of the work, the Contractor and the Supervising Engineer will be entitled to ask for establishment of intermediate stations. Any differences established in the process will be subject to the approval of the Supervising Engineer.

No changes in cross section, with respect to cross sections given in the final design, shall be allowed unless approved in writing by the Supervising Engineer.

2.2.4 STAKEOUT OF STRUCTURES

Based on available setting data, the Contractor is required to stake out all structures, but will first have to propose to the Supervising Engineer the foundations stakeout plan, plan for preservation of the center line of the structure, as well as the transferred elevations, by making an appropriate entry in the site diary.

The Contractor will be allowed to commence the work only after he has obtained the Supervising Engineer's

approval with respect to the above mentioned documentation. The Supervising Engineer is required to either give his approval within three days or to specify in site diary additional conditions that the Contractor has to fulfill in order to obtain this approval.

The Contractor is required to set cross sections, preserve center lines for structures, and make inspections during construction, in keeping with the corresponding activities for the route, as adjusted to construction requirements for structures.

2.2.5 SURVEYING ACTIVITIES DURING CONSTRUCTION

The Contractor is required to keep in good condition the staked center line of the route, and protect all points and road stations, bench marks and traverse points.

If some points disappear or are damaged during realization of the works, the Contractor will be required to reestablish such points at his own expense.

If the design is modified, the Contractor will be required to make the corresponding changes on the site. The changes also include appropriate modification of the center line of the route and other points, as well as changes to road stations. Finally, all these changes must be included in the plan for the preservation of the center line of the route.

The Contractor is required to submit to the Supervising Engineer all stakeout information relating to the change of design. After completion of the subgrade, the Contractor will be required to reset the center line of the route (i.e. the corresponding lines and levels) based on the route stakeout plan, and according to elevations and traverse points.

The lines and levels for center line must be established before proceeding to the construction of stabilized base course of the pavement structure.

The staking out activities for structures must be supervised at all times and reestablished whenever necessary.

2.2.6 HANDOVER AFTER COMPLETION OF WORK

After completion of all road works, and prior to final acceptance, the Contractor is required to rehabilitate, if required to do so by the Client, the center line for the road and structures, stations, traverse points and bench marks, and hand them over to the Client. An appropriate handover protocol has to be signed in this respect. Prior to final acceptance, the Supervising Engineer is entitled to request the topographic leveling information for the entire route of the newly constructed road.

In addition to the documents specified in the technical regulations, the Client is required to submit the following documents to the final inspection commission - not later than on the day of final inspection:

- Layout plan of the completed structure as a part of the topographic survey report, approved by the national Land Records and Survey Office, and prepared by the person duly registered for performance of such activities.

- Topographic Survey of Completed Work, as made after completion of the works in order to register the structure in the cadaster and land records and as requested by the Client to make final account of the works (earthwork, pavement surfacing, road equipment, pavement level control).

The Survey of Completed Work (as-built survey) must contain:

1. copies of cadastral plans with new structures presented on the scale of 1:1000, approved by the competent Cadastral Office;
2. application sheets for cadaster and land records as approved by the competent Cadastral Office and the National Territorial Planning Agency;
3. geodetic network data (list of coordinates and elevations, sketch with description of individual locations);
4. center-line coordinates for the completed road (every 25 m on an average) in digital form (diskette, CD).

The survey of completed work must be conducted in accordance with prevailing laws and regulations.

Quality of work

The measurement accuracy must comply with geodetic standards for individual types of measurement and must be in accordance with requirements for the quality of individual works as specified in these requirements or in special technical requirements.

If the Supervising Engineer determines that the measurements do not comply with design requirements, he will stop such measurement activities. In this situation, the Contractor will have to use procedures providing more accurate results or perform measurement in the manner specified by the Supervising Engineer.

Work quality control

The Contractor is required to preserve and rehabilitate the staked route and all bench marks on construction site throughout the duration of the construction work, regardless of the cause of damage.

Topographic surveys are conducted to determine lines and levels either in the initial stage or after completion of the work.

Topographic surveys are conducted in every scale specified in the design but will also be conducted in any other scale if required by the Supervising Engineer. The accuracy requirements for individual work items will be based on criteria set for such works in these General Technical Requirements.

In case of change in design, the Contractor is required to perform once again all works for the protection of staked center line, and for the setting of cross sections. The Contractor must submit to the Supervising Engineer all staking information and is required to enable the latter to use, for his purposes and without any hindrance, all topographic points and bench marks.

In case the Supervising Engineer determines in the course of his surveys and inspections that the measurements made by the Contractor are incorrect, he will be entitled to entrust an another competent operator with the performance of such measurements, all at the expense of the Contractor, based on actual cost incurred in this respect.

Calculation of work

This work shall be measured by kilometer of the route and connections thereto, in accordance with the design.

The protection of the center line of the route, the stakeout of structures, the maintenance and rehabilitation of the center line of the route and other points needed for successful performance of the works, i.e. as required materials and transport costs related to this work, shall be paid by kilometer of the route and its connections, in accordance with the design.

The price for the maintenance of center line of the route and stakeout of structures includes all required measurements and stakeout activities for all diversions, regulations, access roads, parallel roadways, fences, borrow pits, disposal sites, etc., during the realization of the works as well as during the final inspection, and the Contractor is not entitled to any separate payment for such works.

2.3 CLEARING AND GRUBBING

2.3.1 REMOVAL OF BRUSHES AND TREES

Description of work

This work covers cutting brushes and trees of all dimensions, cutting branches, cutting trees and thick branches to lengths suitable for transport, extraction of roots, brushes and old stumps and stumps of newly cut trees, as well as the transport of brushes, branches, logs and stumps to the zone outside of the road profile, i.e. to the disposal site as specified by the Supervising Engineer. The areas to be cleared from brushes, trees and stumps are marked in the drawings or are specified by the Supervising Engineer prior to the commencement of the work.

The clearing activities also include removal of all unnecessary material that has remained on the site after completion of the above works.

Brushes, trees and stumps must be removed from all areas specified in the design, as well as from areas specified by the Supervising Engineer.

During the tree felling operations, the Contractor is required to fully comply with appropriate hygienic-technical protection measures and must not damage adjoining structures, properties along the route or any other property. Trees that are not to be removed shall not be damaged by the tree felling operations.

In zones excavated for the road profile, all stumps and roots must be extracted to the following depths:

a) at rounded areas of side cuts - down to the rounded area,

b) under the embankment - at least 0.20 m below the foundation soil,

c) below the pavement structure that is placed directly on the foundation soil - at least 0.50 m below the foundation soil level (subgrade level).

Felled trees and stumps must be disposed along the route in areas enabling transport of trees and not presenting hindrance to the works. Stump holes in foundation soil must be backfilled with the soil material similar to the adjoining foundation soil, which will be followed by compaction to the required density.

Calculation of work

The removal of brush and shrubs (up to 10 cm dia.) will be calculated by square meter of the cleaned area.

The removal of trees and stumps will be calculated by unit, taking into account the thickness (profile) of the tree (measured 1 m above the ground level):

- 10-30 cm dia.
- more than 30 cm dia.

2.3.2 REMOVAL OF MANMADE STRUCTURES, TRAFFIC SIGNS, BILLBOARDS, ETC.

Description of work

This work covers extraction and disassembly of traffic signs, billboards, and other traffic equipment (spur stones and barriers), demolition of walls, demolition of existing pavement structures and existing culverts, removal of curbs, demolition and/or relocation of wire, wood and stone fences, removal and relocation of old or fabrication and mounting of new entrances (doors), demolition of abandoned and dilapidated buildings and other structures whose material can not be used for any purpose other than in embankment construction.

The type and quantity of described work shall be specified in the design or defined by the Supervising Engineer. This work does not include removal and relocation of utility facilities such as overhead and buried electricity lines, gas pipelines, oil pipelines, telephone lines, hot water pipes, water supply pipes, sewage disposal pipes and other installations that have to be removed or relocated.

The work also includes removal of other portions of such facilities such as foundations or parts of facilities made of massive materials, which have to be demolished after removal or relocation of the above mentioned lines and facilities.

Activities

The extraction and disassembly of traffic signs, billboards, steel barriers, spur stones and other traffic equipment on the road, must be carried out in such a way that all components remain undamaged and that they can be reused.

Prior to any such disassembly, the engineer with instruct the Contractor which parts of traffic signs, billboards and other traffic equipment have to be preserved, where they are to be stored, and in which way they have to be protected from deterioration. The Supervising Engineer will inform in due time the owners of billboards about the time and place of their disassembly. The Contractor is required to preserve in good state of repair all functional portions of the traffic equipment and billboards until they are taken by the Client or the owner.

Artificial structures, walls and other facilities must be demolished and removed in accordance with appropriate protection measures as based on applicable regulations, and in such a way not to harm neighboring facilities and property, and the existing road.

The existing pavement structures must be demolished in such a way to enable functional use of the terrain after demolition, i.e. in keeping with the design or as specified by the Supervising Engineer.

The existing wire fences, trees, stone fences or fences made of concrete and other elements, which cut into the road profile, must be demolished and relocated to the edge of the right-of-way.

Damaged portions of fences and entrances (doors) must be repaired, and the demolished portions must be replaced by new ones.

The demolition and removal of existing culverts, removal of curbs and traffic equipment, demolition and relocation of fences, demolition of dilapidated buildings, removal of stockpiles and other similar facilities, must be performed in such a way to prevent any harm to other facilities and properties situated next to the road.

The material from demolished facilities should be placed in an area where it will not disturb the works and where in will not harm esthetic appearance of the road and its surroundings, all in accordance with the corresponding decision of the Supervising Engineer.

Foundations or portions of facilities made of massive material, which have to be demolished because of relocation of utilities, must be removed with care similar to that exercised for other facilities, either in the totality or down to a minimum thickness (with respect to the road profile and grade), as specified in Section 2.

Calculation of work

The work described in Section 2 shall not be measured separately, but will be included in unit prices for other items, unless otherwise specified in the contract.

This work will not be paid for separately but will be included in the unit prices for cut or fill operations, which will be considered as full recompense for all works performed by the Contractor according to Section 2, unless otherwise provided for in the contract.

2.3.3 DEMOLITION OF BUILDINGS

Description of work

This work, based on the design or the Client's decision, covers demolition of housing, commercial, industrial and office buildings that disturb construction of the road, extraction of foundations, preservation, transport and storage of reusable material, and clearing waste material and its removal from the site.

Activities

Each building shall be demolished in accordance with the design, in keeping with applicable laws and regulations, and so as not to jeopardize safety of people, equipment, natural environment, and to avoid damage to material that could be reused. Any construction material that can be reused must be cleaned, transported and deposited to the place as specified in the design or as directed by the Supervising Engineer.

After demolition of a building, the site must be cleared from the material, structural components and foundations, and the waste material must be transported to the place where it will not hinder the construction and quality of work and where it will not harm esthetic appearance of the road, i.e. the material must be transported to local waste disposal sites.

Buildings must be demolished in full compliance with hygienic-technical protection measures and without inflicting any harm to other facilities and properties.

Calculation of work

The demolition of buildings will be measured per square meter of actually demolished gross floor area of the building, as measured from the external side of walls. The removal of foundations of demolished buildings will not be measured separately, as it is included in the unit price of this item.

2.3.4 REMOVAL OR RELOCATION OF EXISTING UTILITIES

Description of work

This work covers removal or relocation of existing utilities and other services, such as overhead and buried electricity lines, gas pipelines, oil pipelines, telephone lines, hot-water pipes, water supply pipes, sewerage pipes, etc., except for removal of foundations or massive portions of existing utilities, as described in Section 3.3

All works related to the removal or relocation of existing utilities must be specified in the design. If they are not specified, the Client will engage a specialist or municipal utility organization which will prepare appropriate design documents.

Activities

The work will be performed by specialist utility organizations in accordance with separate design documents, regulations and technical requirements relating to such specialist work.

The work will be supervised by Supervising Engineers or persons authorized to supervise and approve performance of such specialist work.

Calculation of work

The quantities of work performed and realized by a specialized or municipal utility organization will be approved by the Supervising Engineer.

The work will be paid for in accordance with approved quantities of completed work, based on cost estimate applied by such specialist or municipal utility organization.

2.3.5 IDENTIFICATION AND PROTECTION OF UTILITY SERVICES AND OTHER CONNECTIONS

Description of work

The work covers protection of utility services and other connections, such as overhead and buried electricity lines, gas pipelines, oil pipelines, telephone lines, hot-water pipes, water supply pipes, sewerage pipes, and other installations that are an integral part of the future roadway, and that may be subject to damage during construction work due to e.g. passage of heavy or big vehicles.

All works related to the protection of utility services must be provided for in the final design. If this is not the case, the Client will engage a specialist or municipal utility organization which will prepare appropriate design documents.

Activities

The work will be performed by a specialist utility organization in accordance with separate design documents, regulations and technical requirements relating to such specialist work. The work will be supervised by persons authorized to supervise such specialist work.

Calculation of work and payment

The quantities of work performed and realized by such specialized utility organization will be approved by the duly authorized Supervising Engineer.

The work will be paid for in accordance with the approved cost estimate based on quantities of work approved by the Supervising Engineer.

2.4 PROTECTION AND RESTORATION OF PROPERTY, MONUMENTS, WATERCOURSES, LAKES AND TREES

Description of work

The work covers protection and restoration of property, trees, all kinds of monuments, watercourses and lakes that may be harmed during the construction process, and by the road facility itself.

All works related to this protection must be anticipated in the design. If this is not the case, the Client will engage specialized organizations which will prepare all required design documents.

Activities

The works will be carried out by the Contractor or by specialized organizations based on appropriate design documents and technical requirements for these works.

The works will be supervised by people authorized to supervise such works.

Calculation of work and payment

The quantities of work will be approved by the authorized Supervising Engineer. The work will be paid for in accordance with the approved cost estimate based on quantities of work approved by the Supervising Engineer.

2.5 PROTECTION AND RESTORATION OF FORESTS

Description of work

The work covers protection and restoration of forests that may be harmed during the construction process, or

by the road facility itself.

All works related to this protection must be anticipated in the design. If this is not the case, the Client will engage specialized organizations which will prepare all required design documents.

Activities

The works will be carried out by the Contractor or by specialized organizations based on appropriate design documents and technical requirements for these works.

The works will be supervised by persons authorized to supervise such works.

Calculation of work and payment

The quantities of work will be approved by the authorized Supervising Engineer. The work will be paid for in accordance with the approved cost estimate based on quantities of work approved by the Supervising Engineer.

3. EARTHWORKS

3.1 GENERAL REMARKS

This section specifies minimum quality requirements for materials, products and works as applied during realization of earthwork. The GTR are written in such a way that they form a part of the contract while requirements relating to special works are included in the contract as Special Technical Requirements (STR).

Materials, products, equipment and works must comply with the standards and technical regulations specified in the design documentation. If no standard is specified, then an appropriate EN (European standard) must be applied. If a standard or regulation becomes invalid during realization of the project, it will be substituted by an appropriate replacement standard or regulation.

The Contractor may propose application of generally recognized technical rules (standards) issued by a foreign standardization body (such as ISO, EN, DIN, ASTM, etc.), subject to written explanation and approval of the Supervising Engineer. This change may be accepted by the Supervising Engineer if approved by the Designer. The Contractor is required to register this change in the working design.

3.1.1 DEFINITIONS

General terms and expressions, with the meanings they have in these General Technical Requirements, are presented in section 1. The following terms are additional terms that are especially relevant to this section.

Benching is a step-like form of excavation in an inclined natural terrain.

Foundation pit is a pit-shaped excavation in natural soil serving for the construction of foundations for a structure.

Trench is a shallow or deep excavation in natural soil in which utilities are placed.

Sinkhole is a natural depression in karst area.

Geotextiles as used in these GTR, are watertight nonwoven, woven, sewn, and composite materials that do not rot.

Nonwoven geotextile is formed by fixing straight infinite fibers (filaments) or fibers of limited length (short fibers) one over another. This fixing may be a mechanical link (needling or sewing) and/or adhesive link (by binder), or cohesive link (by thermal action).

Woven geotextile is formed of fiber systems (fabric) placed perpendicular to one another. They differ according to the type of fibers and the way in which they are connected, and also according to the number of fibers of equal length.

Sewn geotextile is a collective term for flat products fabricated by interlooping one or several groups of yarns, fibers, threads or other elements.

Geocomposites are combinations of two or more of the above mentioned components.

Geogrids are polymer-based flat sheets used in geotechnical and other civil engineering applications, and their openings are much greater than structural elements that are connected in knots.

Drainage is used for collecting surface and ground waters and/or other fluids, and for transporting such water to other drainage systems.

3.2 EXCAVATION OF TOPSOIL

Description of work

The work covers surface excavation of topsoil of varying thickness and its transfer to either permanent or temporary place of disposal. The work must be carried out in accordance with the design, appropriate regulations, Quality Control and Quality Assurance Program (QCQAP), Construction Management Design (CMD), Supervising Engineer's requirements, and these GTR.

Activities

Because of its properties, topsoil changes its volume considerably when submitted to stress, and its bearing capacity is greatly reduced if the water content is changed; it is therefore not suitable as construction material and must be removed. Topsoil is excavated at the road route and in borrow pits.

Topsoil is most often excavated by mechanical means, while manual excavation is recommended only in cases when mechanical excavation would not prove satisfactory. Shrubs can locally be excavated together with topsoil but must be separated from topsoil prior to its reuse on road slopes or cuttings.

Topsoil will be pushed to storage piles in such a way to prevent it from mixing with other material. If there is surplus of topsoil material, the location and shape of place of its disposal must be determined in advance.

Water must not remain for a long time on the ground surface during excavation of topsoil, in order to prevent excessive moisture buildup in topsoil. This is why care should be taken during excavation to provide for a constant transverse and longitudinal drainage. The water should be evacuated from the roadbed by making appropriate connections to a drainage ditch, creek or a natural depression.

Surfaces on which embankment is to be built following excavation of topsoil shall be prepared and compacted without delay as described in Section 3, and the first embankment layer must be placed and compacted in full accordance with provisions given in Section 3.

The topsoil thickness will be determined by the Supervising Engineer in the presence of an authorized representative of the Contractor and this separately for each profile, or for individual road sections in case there is no variation in topsoil thickness on some sections, based on the geotechnical report and appropriate control during realization of the works.

Topsoil is identified according to its smell, color, content of vegetable and animal residues subject to decomposition, and based on its total organic matter content. If topsoil can not be clearly differentiated by visual inspection from the underlying soil that could be used as foundation soil, the topsoil thickness will be determined by laboratory testing of organic matter content. Unless otherwise specified, topsoil is understood to be a surface layer of natural soil in which organic matter content exceeds 10% of the total mass.

Calculation of work

The work will be measured per cubic meter of actually excavated topsoil, and the payment will be made according to contract unit prices which include excavation of topsoil, its transport to storage pile with spreading and leveling, as well as everything else that is necessary according to the description given in this section.

3.3 WIDE EXCAVATION

Description of work

This work covers wide excavation work as specified in the design and CMD, or as directed by the Supervising Engineer, and includes: excavation of cuttings, side-cuts, borrow pits, excavation for watercourse correction or river regulation, excavation as needed during diversion of roads and access roads, as well as wide excavation during construction of structures. The work also includes loading of excavated material onto a transport vehicle. The excavation shall be conducted in accordance with elevations specified in the design, and according to prescribed slope inclinations, taking at that into account geotechnical properties of soil and required properties relating to subsequent use of excavated material, all in keeping with these GTR.

The work must be carried out in accordance with the design, regulations, Quality Control and Quality Assurance Program (QCQAP), Construction Management Design (CMD), instructions given by the Supervising Engineer, and these GTR.

Activities

The selection of technology for wide excavation depends on:

1. artificial structures planned on the project (retaining and facing walls, drainage facilities, road drainage, etc.),
2. type of soil,
3. use of mechanical equipment in the excavation and transport,
4. height and length of the surface to be excavated,
5. quantity of soil to be excavated,
6. transport distances,
7. excavation deadlines, or road completion deadlines,
8. significance of a particular excavation work for the respect of the overall time schedule,
9. cost-efficiency of excavation work.

The Contractor will select an optimum excavation technology based on the above elements and other circumstances that are likely to influence selection of the work methodology, and in accordance with all

applicable regulations and standards, including provisions contained in these GTR and CMD.

The excavation work will be carried out according to one or several of the following methods:

- full face excavation from front side,
- side excavation for cuttings or side cuts,
- excavation in longitudinal layers,

All excavation work must be conducted to the required grades and elevations as indicated in the design, or as specified by the Supervising Engineer. All safety-at-work precautions, and all protection measures for existing structures and utilities, must be taken during excavation work.

Care should be exercised not to undercut or damage slopes to be realized in accordance with the design, as this could result in landslide or rockfall. The Contractor is required to repair any incidence of slope undercutting or damage without delay and in accordance with instructions of the Supervising Engineer, and will not be entitled to any recompense or compensation for extra work or incidentals. This wide excavation will be conducted according to the technology selected for this work, using appropriate equipment and other machinery, while all manual work should be reduced to the absolute minimum. Depending on the type of soil and the technology and machinery used in excavation, the excavation work can be classified as follows:

a) Excavation in class A material

Class A materials are all strong materials, where blasting operations are required for the entire excavation work.

This group includes all types of strong and very strong rocks, compact rocks (igneous, metamorphic and sedimentary rocks) that are in good condition, possibly with thinner layers of loose material on the surface, or rocks with local occurrences of clay, as well as the locally weathered or fragmented rocks.

This class also comprises soil that contains more than 50% of blocks in excess of 0.5 cubic meters, for the excavation of which blasting operations are also necessary.

b) Excavation in class B material

Class B materials are materials defined as semi-solid rock materials the excavation which is partly performed by blasting and partly by mechanical equipment.

This group of materials includes: flysch with loose materials, homogeneous marl, weathered sandstone, marl and sandstone mixtures, most dolomites (except for very compact ones), thick layers of fragmented surface rock with local occurrences of mixed fragmented material, very fragmented limestone, all types of schist, some conglomerates and similar materials.

c) Excavation in class C material

Class C materials are materials defined as materials for which blasting operations are not necessary, i.e. which can be excavated directly using appropriate machinery - bulldozers, excavators or scrapers. This excavation class includes:

fine-grained cohesive soil such as clay, silt, silty clay (loam), sandy silt and loess,

coarse-grained cohesionless soil such as sand, gravel and their mixtures, natural rock fragments - rock drift or similar materials, mixed soil composed of coarse-grained cohesionless materials mixed with fine-grained cohesive materials.

3.3.1 WIDE EXCAVATION IN CLASS A MATERIAL

When performing blasting operations in this class of material the Contractor is required to use a well trained and qualified crew, experienced in this type of work. The blast design - including also the presplitting activities - is an integral part of the CMD and must be approved by the Supervising Engineer prior to the commencement of blasting operations. All changes and additions to such plan are also subject to approval by the Supervising Engineer.

At every use of explosive, the Contractor is required to act in accordance with blasting technology selected, and in keeping with all laws and regulations applicable to such work, all in order to ensure an adequate protection of the construction site, equipment, structures, people and natural environment. During blasting operations and excavation work, all influences that are likely to disturb traffic, people or environment should be reduced to minimum. In case of any such disturbance, the Contractor will be required to undertake appropriate remedial actions at his own expense.

All necessary traffic and safety signals must be placed during realization of these works.

Boreholes for blasting operations will generally be realized by means of appropriate drills equipped for and adapted to such type of work. Physicomechanical properties of rock massif, and the strike and dip of geologic formations with respect to the center line of the road, will be determined during preliminary geotechnical investigations. These investigations are the basis for selecting an appropriate technology, i.e. for determining the excavation method, drilling method, spacing of boreholes and the size of explosive charge. The distribution of boreholes and the quantity of explosive used per every borehole should be such to provide most favorable granulation of blasted material and to reduce to minimum any need for further fragmentation of rock blocks.

In order to realize slope of highest possible quality, the so called "presplitting" will be performed prior to primary blasting operations. This facilitates final slope shaping, slope surfaces are more regular, and the quantity of loose material to be evacuated from the slope is reduced to minimum. In addition, this procedure prevents loosening of rock mass in slope area, and hence slopes are more stable and their maintenance is easier. In fact, the overbreak is reduced to minimum if rock mass is cut along the design slope line to the desired grade. However, this effect will greatly depend on the rock mass strength, i.e. on the dip and strike of layers with respect to the center line of the road, and on the type of the bedding plane and the rock mass fragmentation level.

The material will be excavated to slope inclinations specified in the design and all loose or detached parts of the rock shall be removed down to the subgrade level, to enable operation of site traffic. Temporary transverse and longitudinal drainage shall be realized without delay. If it is necessary to provide side cut inclination steeper than the lines specified in the design (to protect structures or other facilities), this can in some cases be achieved by using an appropriate drilling and blasting technique. In this way, the inclination of the slope may be increased by approximately 25 percent, particularly when the orientation of layers in the slope is favorable. Prior approval of the Supervising Engineer is required for such solutions.

If the excavated material is to be used in the production of granular stone material for subsequent construction of wedges for structures, for the construction of base courses for road pavements, or as an aggregate in the fabrication of concrete or asphalt, it will be necessary to obtain from an authorized

organization, before proceeding to such use,

an appropriate evidence confirming acceptability of such material, as based on laboratory testing results.

If initial testing undertaken by an authorized organization shows that the stone material is acceptable, it will be necessary to develop an appropriate technology while taking care to prevent residual clay from mixing with stone aggregate that has been tested. The use of such material is subject to prior approval of the Supervising Engineer.

3.3.2 WIDE EXCAVATION IN CLASS B MATERIAL

In addition to mechanical excavation, this class of excavation also calls for some blasting operations. Regardless of the fact that the scope of blasting operations is relatively small when compared to mechanical excavation, the Contractor will still be required to apply the technology and safety precautions similar to those used in case of blasting in pure rock material (class A material). During excavation of material sensitive to atmospheric influences, the Contractor will have to provide for immediate loading of such material, its transport to the permanent disposal site or to the place of incorporation in the embankment, and for the unloading and placing of such material.

The excavation will be made to the planned subgrade level only if the material is not susceptible to atmospheric influence and if the subgrade soil is able to withstand on-site traffic load. If this is not the case, the excavation will be made to the level 0.2 - 0.3 m above the planned subgrade level, and the final excavation will be made immediately prior to the construction of subgrade and pavement structure. Materials coming from wide excavation may be of variable composition, and so the transverse and longitudinal drainage must be impeccable during all phases of the work. All water must be evacuated from the roadbed and carried to the final zone of discharge. No additional payment will be made for difficult work conditions and replacement of water-saturated mixed material if this is due to improper work and poor drainage.

During excavation works and until completion of all works on the project, the Contractor will be required to avoid any damage to slopes that might arise from irregular drainage, and to ensure their stability until completion of landscaping operations and until final acceptance and handover of the project.

Slope inclination in cuttings and side-cuts must be realized in accordance with the design. Inclinations may be quite variable, as this group of materials covers a wide variety or rock formations as classified according to their physicomechanical properties. The slope inclination will depend:

- in case of sandstone and conglomerates, on the type of binder and the coherence level,
- in case of stratified rocks, on the direction of dip (with respect to the road center line or the hill), and
- on the fracturation level and soil properties.

Any change in slope inclination proposed by the Contractor during the work will be subject to the approval of the Supervising Engineer in consultation with the Designer, who will make their decision based on properties of the mixed materials, geological results, increased need for some material, relevant events occurring during excavation work, etc.

These materials are mostly used in embankment construction. However, materials belonging to this class may sometimes be used for construction of base courses for approach roads and other local roads, although

in such cases the acceptability of the material must be proven through testing on appropriate test sections.

3.3.3 WIDE EXCAVATION IN CLASS C MATERIAL

In materials belonging to this class, the excavation is performed by mechanical equipment. Scarifying operations are made in such material only exceptionally, i.e. when needed to improve results of mechanical excavation. The type of machinery and the number of machines will be defined in the CMD based on excavation technology selected by the Contractor.

The excavation is allowed down to the depth of 0.2-0.3 m above the subgrade level specified in the design, and the final excavation will be made immediately prior to the construction of pavement structure, except for materials that are not sensitive to water.

If the excavated material is sensitive to atmospheric influences, it shall not be placed in the roadbed and shall be transported and used as fill immediately after excavation, or transported to the place of permanent disposal. All excavation activities must be carried out in keeping with the profiles, levels and inclinations specified in the design, taking at that into account properties of excavated material and possibility of its subsequent use e.g. in embankment construction or as building material for some other purposes.

All information given for the drainage and slope inclination with respect to excavation in class B materials, may also be applied for materials belonging to this class, especially for soil materials as they are particularly sensitive to water and for slope stability, so that even the slightest mistake is likely to slow down the progress of work and cause significant material damage. The inclination of slope during excavation will range from 1:1 for cohesionless coarse-grained soil to 1:3 for the fine-grained cohesive soil. Materials belonging to this class are most often used for embankment construction. As these materials often originate from excavation made in shallow earth cuttings or side cuts, their moisture content is usually high, and they may also have a high organic content.

For that reason, the quality of this material is normally checked during the work by laboratory testing as specified (embankment construction), and the criteria defined in this section serve as basis for the determination of their suitability. In the course of excavation, appropriate samples must be taken at every change of soil conditions so that the suitability of soil for the planned use may be checked.

If it is determined during this testing that the material is not suitable for embankment construction, the Supervising Engineer will specify where the material is to be discharged, and will approve replacement by a more suitable material from borrow pit. Unless otherwise specified, this material will be used for embankment widening and for making platforms for parking lots and vista points.

The Contractor is required to use excavation technology as specified in the CMD and in the design. If required materials must be homogenized, then vertical or horizontal excavation will be made as appropriate.

The Contractor will propose his own technology, if the excavation technology is not specified in the design or if the specified technology can not be applied due to some changes made during the work.

The technology proposed in this way will be subject to the approval of the Supervising Engineer.

The mass haul diagram is in most cases provided in the design. If that is not the case, it will be established on the site and subjected to the approval of the Supervising Engineer.

The mass haul diagram shows best locations for permanent disposal of materials if there is a surplus of material from excavation, or if a material can not be used in embankment construction. Requirements for the transport of material to the permanent place of disposal are given in section 3.

In case of shortage of material for embankment construction, such shortage will be compensated by material from the borrow pit specified in the design or as approved by the Supervising Engineer.

If the Contractor considers that an another borrow pit is more favorable to him, he will have to prove quality and quantity of such material at his own expense, and shall on that basis ask the Supervising Engineer to approve the use of such borrow pit. The costs of land acquisition, provision of access to the borrow pit, and restoration of the pit at the end of excavation work in the pit, as well as all appropriate contributions and charges, shall be paid by the Contractor, and the Client will approve only the costs that would have been paid if the borrow pit specified in the design had been used.

Prior to the use of the borrow pit, the Contractor will, in consultation with the Supervising Engineer, survey the site and prepare the proposal for excavation technology to be applied in the borrow pit. This technology proposal must contain: layout plan with cross sections of the proposed excavation, excavation method in vertical and horizontal directions, type of machines and vehicles, place of disposal of topsoil and other unusable material, and the proposal for the borrow pit restoration after the end of excavation.

Before starting to use the borrow pit, the Contractor will be required to submit the technology proposal to the Client for approval.

The excavation rate in the borrow pit must be harmonized with the transport and placing possibilities, particularly if the material is sensitive to atmospheric influence.

Drainage requirements for the borrow pit, and slope inclinations during its use, must comply with requirements specified for earth materials.

The Contractor will have to ask the Supervising Engineer's approval for all subsequent extension and deepening of the borrow pit. All expenses and damage arising from the works shall be borne by the Contractor. The Client will bear land acquisition and compensation costs with respect to borrow pits or disposal sites planned in the design or specified in order given by the Supervising Engineer. The Contractor shall pay all compensations arising from the damage to agricultural crops or land situated outside of the right-of-way.

Calculation of work

Quantities to be used in calculation of wide excavation activities shall be determined by measuring actual excavation of soil in natural condition (in bank state), as specified in the design or according to changes approved by the Supervising Engineer.

The following criteria are used to determine quantities and types of wide excavation material. Quantities of individual classes of material ("A", "B" or "C") will be specified by the Supervising Engineer at individual cross sections as a percentage of the overall cross sectional area. These percentages will then be used to calculate total quantities for every class of material, based on the approved technology of excavation.

No payment shall be made for material excavated in excess of quantities presented in the design or authorized by the Supervising Engineer, i.e. for quantities that are due to Contractor's error.

Widening of cuttings for borrow areas will be paid for as wide excavation. If borrow areas are situated outside

of the road route, the excavation volume will be calculated based on the quantity of compacted fill consisting of material from the borrow, i.e. according to the principle that one cubic meter of compacted embankment equals one cubic meter of excavation in the borrow area.

If the embankment will partly be built using material from road cutting, and partly using material from excavation made in the borrow situated outside of the road route, then the material from the road cutting will have to be used first, i.e. before starting to use the material from the borrow.

The quantities relating to the excavation from the borrow pit shall be those defined in the design, and the procedure similar to that used for classification of wide excavation on the road route will be applied.

The work will be paid per in-place bank cubic meter of excavation according to unit prices specified in the contract, separately for individual classes of material ("A", "B" or "C").

The unit price includes all excavation activities, loading into the transport vehicle, cleaning the slope from unstable blocks and loose material, leveling excavated and adjacent areas, so that the Contractor will not be entitled to any additional compensation for such work.

3.4 BENCHING EXCAVATION

Description of work

The work covers excavation of benches in sloping foundation soil in all classes of material, with loading, according to lines and grades shown in the design or as specified by the Supervising Engineer. The material excavated in benches shall be incorporated in embankment layers.

The work must be carried out in accordance with the design, appropriate regulations, Quality Control and Quality Assurance Program (QCQAP), Construction Management Design (CMD), Supervising Engineer's requirements, and these GTR.

Activities

All benching excavation will be performed using an appropriate mechanical plant. In exceptional cases, a smaller portion of the work may be carried out manually, but such manual work should be reduced to minimum. In sloping terrain, benches will be made for all inclinations in excess of 20° so as to ensure stable contact between embankment and the foundation soil.

Benches may vary between 2.0 and 5.0 m in width. The downward grade of benches must be 4%, unless otherwise specified in the design. The side slope of benches will range between 2:1 to 3:1, depending on the type and properties of soil and on the inclination of the terrain.

On flatter slopes, the distance between individual benches may range from 1 to 1.5 m. No such distance will be applied on steeper slopes. Benches will not be required in rocky terrain in case such terrain presents natural irregularities which prevent destabilization of the embankment.

The subsoil, i.e. the soil under the benches, must meet appropriate density criteria, depending on the type of soil and its elevation, but shall in any case comply with requirements specified in Section 3.

Calculation of work

The benching excavation will be measured according to the actually excavated quantity of soil, in bank cubic meters, separately for each class of material ("A", "B" or "C"), and will include loading into a transport vehicle. The percentage of every soil class will be entered on cross sections at places where benchings are presented, which will represent the basis for final calculation of total bench excavation quantities for every class of material.

The benching excavation will be paid per bank cubic meter of excavation according to unit prices which include, in addition to excavation, the transport of excavated material to embankment, as well as all necessary shaping of slope and foundation soil surfaces. The cost of overbreak not shown in the design or not approved by the Supervising Engineer, will be borne by the Contractor.

3.5 EXCAVATION WORK FOR FOUNDATIONS AND FOUNDATION PITS

Description of work

The work covers excavation for foundations up to 2 m in width and foundation pits for structures more than 2 m in width, in various depths, and in every class of soil. The excavation work will be carried out in full accordance with lines, grades and elevations specified in the design.

The work must be performed in accordance with the design, appropriate regulations, Quality Control and Quality Assurance Program (QCQAP), Construction Management Design (CMD), Supervising Engineer's requirements, and these GTR.

If necessary the pits will be shored and braced, or protected by piling or cofferdams.

The work also includes additional activities as needed for the collection and pumping of rainwater, ground water or water from sources, vertical transport of excavated material to the required height, placing material to be used in backfilling operations around the finished foundations, and transport of surplus excavated material.

Activities

The foundation structures can be: strips, footings, girders or slabs. According to the depth of foundation work, we may differentiate:

a) shallow foundations, open pit foundations, open pit foundations may be:

- without shoring and bracing, but with such slope that ensures the factor of safety against sliding of no less than F = 1.3, and
- with shoring, in which case the shoring can be:
  - wooden formwork,
  - riven steel and wooden sheet piling,
  - driven and anchored posts with an appropriate form between them,
  - special peripheral concrete walls either circular (wells) or rectangular (boxes) in shape.

According to the presence of water, we may differentiate:

- foundations in dry environment,
- foundations in water

Foundations are realized based on working drawings presented in the foundation work design. This foundation design must contain: subsoil test results, allowable load analysis, settlement analysis for the overlying structure, its portions and neighboring facilities, foundations dimensioning analysis, and other information as specified in applicable laws and regulations relating to the field of civil engineering.

Foundation pits will be shaped in accordance with the design.

If it is specified in the design that foundations are to be realized with shoring, and if some changes in the bracing method prove necessary during realization of works, the Contractor shall advise the Supervising Engineer about the new situation. The excavated material will have to be removed from the wall and edge of excavation and placed at a safe distance in order to prevent cave-in, and will then be classified according to its usability as backfill material to be placed around the foundations, as material to be placed in embankment, or as material to be transported to a place of disposal.

If foundation pit is to be shored, the Contractor will be paid for the 50 cm wider work space, which is calculated as a clear width between the foundation pit formwork and the formwork for the structure.

If the bottom of the foundation pit consists of a loose material, this material will be compacted immediately prior to the construction of foundations. If the foundation pit bottom is made of cohesive material, and if the pit bottom has been damaged, the damaged portion will have to be improved immediately before construction of foundations, which may inter alia include replacement with suitable material, if necessary. If due to the Contractor's error the foundation pit has been excavated to an excessive depth, the Contractor will be required to remedy the situation in accordance with the corresponding structural analysis, or as advised by the Supervising Engineer.

If some obstacles such as cables, ducts, drainage channels, structures, elements, etc. are encountered during excavation of the pit, the Contractor will be required to advise the Supervising Engineer about such event and the latter will decide in which way the

Contractor will remove or otherwise neutralize such obstacles, in keeping with all relevant regulations and instructions.

If water is pumped during pit excavation, this has to be done in such a way to prevent reduction of compaction level, and to avoid scouring of fine particles. Piling made of wooden planks and concrete or steel sheets with grooves, will be provided to reduce the speed and quantity of water inflow.

The Contractor is required to apply all necessary safety precautions during realization of this excavation work.

The method selected for handover of this work (i.e. possible inspection and acceptance by specialists - geotechnical engineers, geology engineers, or by the Supervising Engineer) will depend on the significance of the structure and on soil composition. The handover method will be defined in the design.

Calculation of work

The work will be measured per bank cubic meter according to really excavated quantities, based of measurements from the design or as specified by the Supervising Engineer. Measurements will be made from the top edge to the bottom of excavation, taking into account the class of soil.

The depths will be measured from an average terrain level at the periphery of the foundation pit, and such level will be considered as reference level for determination of the excavation level. The excavation for work space will also be measured.

The work will be paid for according to the unit price defined in contract for cubic meter of excavation, according to quantities as defined in previous description for work measurement.

The unit price contains all work that is necessary for excavation of a foundation pit, i.e. excavation, necessary strutting, formwork, all drainage facilities, vertical transport and temporary disposal of excavated material, its loading into transport vehicles, transport to specified locations and unloading, and terrain cleaning after completion of this work, in all as described in this section, and the Contractor is therefore not allowed to claim any additional payment for this work.

Various obstacles described in this section shall not additionally be paid for except in cases where the increase in cost is significant (such as for realization of structures that could not have been foreseen prior to construction). These or similar unforeseen works are subject to the approval of the Supervising Engineer.

3.6 EXCAVATION OF UTILITY TRENCHES AND DRAINAGE DITCHES

Description of work

The work related to the excavation of trenches for utility and drainage services includes excavation of material in full conformity with the drawings contained in the design, and all required bracing, drainage, temporary disposal of excavated material, and spreading or transport of surplus material after trench backfilling. The work also includes spreading of material, after its transport, to embankment or permanent place of disposal.

The work must be carried out in accordance with the design, appropriate regulations, Quality Control and Quality Assurance Program (QCQAP), Construction Management Design (CMD), Supervising Engineer's requirements, and these GTR.

Activities

Utility trenches and drainage ditches will be excavated by mechanical means. Manual excavation will be done only in exceptional cases, and all necessary precautions and safety-at-work measures will have to be applied during such excavation.

Trenches will be excavated in all soil classes ("A", "B" or "C") in accordance with provisions contained in Section 3. Trenches will be excavated freely, i.e. without shoring or bracing, only in case of shallow excavations.

In case of greater depths, trenches will have to be braced, and the bracing method will depend on the depth

of excavation and the type of soil.

The bracing method will be proposed by the Contractor and approved by the Supervising Engineer. The excavation must be carried out gradually to avoid cave-in. If necessary, pumping of water will also be ensured during trench excavation.

In case of unsupported trenches, clear width is calculated as bottom width, while in case of trenches with bracing, it is the distance between braced walls of the trench. To provide for pipe connections, manholes and similar facilities, appropriate widenings of no less than 50 cm will be planned and these widenings will be paid to the Contractor.

In case of drainage ditches, we can have:

1. excavation for shallow longitudinal drainage in cuttings and side cuts,
2. excavation for vertical drainage,
3. excavation for traditional type of drainage.

The excavation in cohesive soil material for shallow longitudinal drainage in cuttings and side cuts will be carried out in accordance with the design. Any loose portions of such excavation must be compacted to density approximately corresponding to that of the surrounding soil.

The excavation for vertical drainage will be performed by an appropriate drilling rig. The location of vertical boreholes, borehole diameter, and borehole depth, must be specified in the design.

The excavation for the traditional type of drainage with vertical walls will be performed by mechanical equipment. The ditch will have to be braced when such action is made necessary due to the type of soil or ditch depth.

The excavated material will be classified into appropriate classes ("A", "B" and "C")

The excavated material will be temporarily placed along the ditch edges, at such distance from the edge that will not harm the excavation. If suitable, this material will be used for ditch backfilling, while the surplus material will be disposed and spread at a disposal area specified in the design or defined by the Supervising Engineer.

After completion of the excavation work, the height control will be made at every design profile and, if necessary, at appropriate points between such profiles.

Calculation of work

The work for utility trenches and for shallow, longitudinal and traditional drainage ditches will be measured per in-place bank cubic meter of actually excavated trench/ditch, based on the design data. Overbreaks will not be accepted unless otherwise specified by the Supervising Engineer.

The excavation work for vertical drainage will be measured by meter of completed borehole.

The work will be paid for according to the contract unit price for this type of work and includes excavation in the specified-class soil, all necessary bracing, water pumping, disposal, spreading and transport of surplus material, and clearing the terrain in the trench/ditch zone.

The price of excavation for vertical drainage includes borehole drilling and the transport of the drilling rig to the site and its removal after completion of work.

In case of traditional type of drainage, the unit price for excavation varies according to the depth (0 to 2 m; 2 to 4 m; 4 to 6 m and more than 6 m).

3.7 EXCAVATION OF REGULATION CHANNELS

Description of work

This work covers excavation for regulations, channels and similar work in every class of soil, carried out in accordance with the design.

The work also includes disposal of material along the excavated channel with spreading and leveling, or transport of material to the permanent place of disposal, as well as all additional work as needed for the diversion of water courses.

The work must be carried out in accordance with the design, appropriate regulations, Quality Control and Quality Assurance Program (QCQAP), Construction Management Design (CMD), Supervising Engineer's requirements, and these GTR.

Activities

The excavation work must be carried out by mechanical equipment and in accordance with the technology selected, while all manual work should be reduced to minimum i.e. restricted to zones where mechanical equipment can not be used.

The excavated material must temporarily be placed at a safe distance from the edge, i.e. at least one meter from both sides of the top edge, if terrain conditions and other circumstances permit such distance.

The topsoil must be separated from other materials in case surplus material is to be used for embankment construction.

If the use of excavated material for a particular purpose (embankment) is not specified in the design, the material will be either spread and leveled after completion of the work, or transported to a place of disposal as specified in the design or as directed by the Supervising Engineer, where it will be treated as indicated in Section 4.

The excavated material will be classified into an appropriate class ("A", "B" and "C")

The bottom alignment of regulation channels must be as specified in the design so that no water stays in the channel, which will be checked by surveying to be performed after excavation at every design profile or, if necessary, at appropriate points between such profiles.

If the quantity of material excavated during construction exceeds quantity specified in the design, and if this has not be approved by the Supervising Engineer, the Contractor will not receive approval for such

excavation, and any remedial activity, if required, will have to be performed by the Contractor at his own expense.

The work has to be organized in such a way that the completed work or open surfaces can not be damaged e.g. by washout of material in case of bad weather.

Any roots or similar obstacles must be removed from the channel zone. This work is included in the unit price for excavation.

After completion of the excavation work, the height control for channel bottom and slopes will be made at every design profile and, if necessary, at appropriate points between such profiles.

Calculation of work

Cross sections of the terrain (as figuring in the design) must be inspected and, if necessary, amended, prior to the commencement of work. The depth of excavation is determined from the original elevation in the axis of every cross section, which is defined as a mean value of two natural-soil elevations at both edges of the excavated channel.

The quantity of natural soil is calculated per bank cubic meter based on cross sections, distance between them, and their depth.

The quantity is also determined by class of material.

The work is paid according to unit prices per bank cubic meter of natural soil of specified class. The price includes all work described in this section, including terrain clearing and cleaning in the channel zone.

3.8 TRANSPORT OF MATERIALS

Description of work

The work covers transport of excavated material of class "A", "B" or "C" (according to Section 2-02) from the place of excavation - which can be either the cutting, trench or borrow pot - to the place of unloading, i.e. embankment or storage pile.

The work must be carried out in accordance with the design, appropriate regulations, Quality Control and Quality Assurance Program (QCQAP), Construction Management Design (CMD), Supervising Engineer's requirements, and these GTR.

Activities

The type of transport vehicles and the manner of transport are defined in the CMD, and may vary depending on: the class and quantity of material, excavation method, loading method, and transport distance. Transport capacities must be harmonized with excavation capacities, but also with the output of machinery used for embankment compaction.

Attention should be paid in transport operations to the capacity of trucks i.e. to their ability to carry loose material, and it is on that basis that the number of transport units must be planned.

Transport operations must be rapid and cost-efficient. To achieve this, the company must use transport

vehicles:

(a) of high capacity,

(b) characterized by high versatility.

The excavated material is pushed and transported mostly by bulldozers, scrapers, dumpers, hauling vehicles for transport of materials outside of public roads, and vehicles for long-distance transport of materials on public roads.

According to these technical requirements, transport distances along previously planned routes or on public roads are classified as follows:

1. pushing or moving up to 10 m in length (calculated in excavation),
2. pushing to the distance of 10-60 m,
3. pushing to the distance of 60-100 m,
4. transport to the distance of 100-300 m,
5. transport to the distance of 300-600 m,
6. transport to the distance of 600-1500 m,
7. transport to the distance of 1500-5000 m,
8. transport to the distance of more than 5000 m.

The Contractor has to provide for all transport operations, both on the site and on public roads.

The Contractor will achieve this:

a) on the site

- by properly building and maintaining haul roads,
- by building and maintaining temporary structures,
- by marking crosscuts with appropriate marks, which must be illuminated at night-time.

b) on public roads

- by placing appropriate traffic signs and illuminated traffic controllers,
- by using vehicles of appropriate size and carrying capacity (axle load),

- by preventing mud from dirtying the pavement and, if that can not be prevented, by cleaning the pavement.

The Contractor will bear full responsibility for any harmful events arising from his failure to act in accordance with applicable laws, regulations and requirements.

Calculation of work

The quantity of transported material will be measured per bank cubic meter of excavated material based on design requirements and transport actually made to a specified distance. If the material from borrow area is transported, the transport will be measured per cubic meter of compacted embankment.

The work will be paid for according to contract unit prices per cubic meter of material transported to a specified transport distance.

3.9 IMPROVEMENT OF FOUNDATION SOIL

Description of work

This work covers all activities that have to carried out so that the natural soil can withstand load from the embankment, pavement structure and traffic (for road sections on embankment) or from the pavement structure and traffic (for road sections in cuttings). The depth until which the foundation soil will be improved is specified in the design and may be up to 30 cm, depending on the type of soil.

The work must be carried out in accordance with the design, appropriate regulations, Quality Control and Quality Assurance Program (QCQAP), Construction Management Design (CMD), Supervising Engineer's requirements, and these GTR.

Activities

In case of cohesive soil, the foundation soil will be improved after removal of all topsoil as specified in the design or as directed by the Supervising Engineer. The soil from which topsoil has been stripped must be first of all brought to the moisture level enabling optimum compaction. This is obtained by moisturizing or loosening and drying the soil. The compaction is performed only after an optimum moisture content, as based on the standard proctor compaction procedure, is obtained.

In case of materials sensitive to water, a special attention must be paid to protect the foundation soil against excessive moisture. The technology and the scheduling of work must by adjusted in such a way to perform compaction, if moisture content is adequate, immediately after topsoil stripping. A proper drainage of foundation soil must be ensured throughout the construction.

The surface must be leveled before proceeding to compaction work.

The foundation soil will be compacted in accordance with the compaction technology selected, using compaction machines corresponding to the type of cohesive soil.

A similar improvement technique is used for cohesionless materials, the only difference being that this soil is not so sensitive to change in moisture, and the compaction is mostly performed by vibratory tamping equipment.

In rocky terrain, the soil on which an embankment is to be placed will not be compacted. In this case, the improvement consists of cleaning the surface and providing for good contact with the embankment, particularly if the terrain is sloping and if benches are realized.

The rocky terrain in cutting will be leveled with a layer of fragmented stone material up to 20 cm in thickness, and will then be compacted by appropriate equipment.

Quality control

The quality control of materials placed in foundation soil is conducted in accordance with the following

regulations:

Taking soil test samples
Determining moisture of soil samples
Determining unit weight of soil
Determining bulk density of soil
Grain size distribution determination
Soil consistency limit determination. Atterberg limits
Determination of inflammable and organic matter content in soil
Optimum water content determination
Compressibility modulus determination by bearing plate method
Earthwork in road construction

Control tests

These tests cover determination of the level of compaction according to the Standard Proctor test procedure (**Sz**) or the compressibility modulus (**Ms**) determination by bearing plate (30 cm - depending on the type of material). At least one test must be conducted for every 1000 square meters of improved foundation soil.

The Designer is entitled to define, through special technical requirements constituting an integral part of the design, the frequency of testing that is higher than the one given in the preceding paragraph.

Type of material	Level of compaction **Sz** (acc. to Standard Proctor),min. value (%)	Compressibility modulus **Ms** (plate: 30 cm dia.), min. value (MN/m^2)
Earth material: (material belonging to excavation class "C" - low to high plasticity clay and silty soil)		
a) natural soil composed of cohesive soil materials, for embankments not exceeding 2.00 m in height	97	20
b) natural soil composed of cohesive soil materials, for embankments of more than 2.00 m in height	95	20
Cohesionless materials and mixed materials: (materials from excavation classes "A" and "B" and partly from exc. class "C", stone materials, mixed stone and earth materials, clayey gravel, clayey scree, flysch sandstone, dolomite, schist, conglomerate, sand, sandy gravel).		

c) Natural soil composed of cohesionless earth and mixed materials, with embankment not exceeding 2.00 m in height.	100	25
d) Natural soil composed of cohesionless earth andmixedmaterials,withembankment exceeding 2.00 m in height	95	25

Table 1 - Foundation soil quality determination criteria

These tests are the same as control tests, and their number depends on the type of material, soil moisture, etc. At least one test for every 2000 square meters of improved foundation soil will be performed.

3.9.1 QUALITY CRITERIA FOR PLACING OPERATIONS

Cleaned, leveled and prepared foundation soil must be compacted in accordance with requirements specified in Table above.

The embankment height shall be understood as the height from the foundation soil level to the subgrade level.

If the foundation soil is highly variable (sinkholes, karrens, swallow holes, etc.) it must be adequately prepared, or improved as specified in the design, before proceeding to embankment construction.

When compaction criteria specified in Table 1 can not be met, the following actions (depending on reasons that caused such situation) will be taken:

- improve surface drainage by providing an appropriate drainage system,
- replace poor-quality material with an appropriate better-quality material,
- improve the material by adding lime, cement or an another type of hydraulic binder,
- proceed to soil strengthening by geotextile or polymer geogrids.

To ensure compliance with the requirements, the foundation soil improvement method will be selected based on appropriate laboratory testing and/or visual inspection of the foundation soil condition and quality. The improvement method shall be proposed by the Contractor and approved by the Supervising Engineer.

Calculation of work

The work will be measured and calculated per square meter of completely prepared foundation soil.

The payment will be made according to contract unit prices which include cleaning, leveling, scarifying (to dry the soil), sprinkling and compaction, i.e. full preparation of the foundation soil.

3.9.2 REPLACEMENT OF WEAK FOUNDATION SOIL WITH BETTER MATERIAL

Description of work

The work covers excavation of weak material in the foundation soil and its transport to the storage pile, as well as the replacement of such material with a better-quality material.

The work must be carried out in accordance with the design, appropriate regulations, Quality Control and Quality Assurance Program (QCQAP), Construction Management Design (CMD), Supervising Engineer's requirements, and these GTR.

Activities

Weaker material from foundation soil will be replaced with a more appropriate material when quality requirements can not be met despite the use of an appropriate method of work.

This is mostly done in case of low embankments where, due to small thickness of embankment, other foundation soil improvement methods can not be applied.

Materials are excavated in layers of appropriate thickness as specified in these GTR.

The replacement material is proposed by the Contractor. The Contractor is also required to perform all tests that are needed to check its quality. The use of this material will be subject to the approval of the Supervising Engineer.

The thickness of the layer to be replaced will be defined in the design and, if this is not the case, such thickness will be defined on a test section. The test section will be used to determine the technology of work, the type of compaction equipment to be used, and the operating method for such equipment.

The test section will be at least 50 m in length.

The compaction level of material will be tested at test sections in the manner and according to methods as specified in Section 3, and in compliance with quality control criteria described in that section. The compaction level will be tested on at least five spots. All costs relating to such test section will be borne by the Contractor and, in case the test section proves to be of satisfactory quality and if it fits in the road route, such test section shall be approved as a completely finished replacement layer.

Calculation of work

The finished replacement layer will be measured and calculated per cubic meter of fully completed and compacted layer.

The excavation of weak material will be paid for according to the unit price for excavation, transport to stockpile will be paid for according to the unit price for transport based on actual distance of such transport while the replacement material will be paid for according to the unit price for embankment construction.

3.9.3 IMPROVEMENT OF SINKHOLES

Description of work

The work covers all activities that have to be carried out according to solutions presented in the design, the objective being to ensure natural role of sinkholes situated within the road route. The sinkhole improvement will be performed in accordance with the design where several typical solutions will be presented, depending on the sinkhole shape, size and function. These technical solutions for protection of karst features are of general nature only and shall be adjusted and complemented as appropriate, taking into account actual situation on the site.

The work must be carried out in accordance with the design, appropriate regulations, Quality Control and Quality Assurance Program (QCQAP), Construction Management Design (CMD), Supervising Engineer's requirements, and these GTR.

Depending on the level of permeability or impermeability of sinkholes, i.e. on their capacity to evacuate surface waters, these typical sinkhole improvement solutions will mainly consist in placing stone blocks or pure stone material, in combination with geotextile which acts as filter.

Special concrete and reinforced concrete structures will be specified in the design for the improvement of all sinkholes not filled with alluvial soil that are encountered during construction.

Appropriate civil engineering solutions will in such cases be determined after sinkhole identification.

Excavation work

At the bottom of sinkholes, near the sinkhole edges, the topsoil or alluvial material will be excavated, if required, down to the basic rock in order to obtain an appropriate bedding for the coherent rip rap.

In case of narrow sinkholes will steep slopes, the excavation will be performed using an appropriate mechanical equipment, provided that the bottom is fully cleaned down to the basic rock prior to such excavation.

Construction of improvement structures

Sinkhole improvement structures must be realized in such a way to ensure proper functioning of the future road, i.e. to meet requirements relating to the roadbed and drainage of water from the road, and to undertake everything that is necessary to keep the water regimen in the immediate vicinity of the sinkhole unchanged after the road construction.

Appropriate provisions from these GTR will apply for materials, construction methods and quality of structures, in relation to the improvement of sinkholes by means of concrete and reinforced concrete structures.

Quality control

Quality control for the stone material and for the preparation and placing of concrete and other materials, will be conducted in accordance with relevant provisions of these GTR.

Calculation of work

The excavation of material from sinkholes will be measured per cubic meter depending on the class of excavation as specified.

The placing of stone material will be measured per cubic meter of placed stone based on special design requirements.

Concrete works will be measured per cubic meter of placed concrete, as established according to dimensions given in the design, while steel reinforcement will be measured according to actually placed quantities based on the design, in kilograms. The concrete will be paid for according to the contract unit price for cubic meter, and the price shall include all work, material and everything else, and the Contractor will not be entitled to any additional payment in this respect.

The steel reinforcement will be paid for according to the contract unit price per kilogram of steel placed. The price includes supply, bending, transport, placing and everything else that is needed for the works, and the Contractor will not be entitled to any additional payment in this respect.

3.9.4 IMPROVEMENT OF WEAK SUBGRADE AND FOUNDATION SOIL BY GEOTEXTILE

General

These technical requirements define the use of geotextile for the improvement of weak foundation soil prior to embankment construction, and for subgrade improvement. These technical requirements may also be applied for roadways with pavement structures made of loose layers.

The work must be carried out in accordance with the design, appropriate regulations, Quality Control and Quality Assurance Program (QCQAP), Construction Management Design (CMD), Supervising Engineer's requirements, and these GTR.

Performance

The way the geotextile acts when used in earthwork and foundation soil can be determined through fulfillment of several objectives. In this case, the following mechanical and hydraulic objectives are of highest relevance:

- separation,
- strengthening,
- filtering, and
- drainage.

These objectives are realized as a combination of various individual functions. By its performance, the geotextile prevents separation of two materials presenting significantly different properties. In this way the uniformity and function of both layers is preserved, and the thickness of individual layers remains unchanged.

The strengthening action increases the bearing capacity of the structure.

The filtering and draining action enables proper drainage into the subsoil, which favorably influences the

shear strength of the structure.

Technical conditions and requirements for geotextile selection

Mechanical testing for geotextile selection

Regardless of its function, every geotextile used in earthwork and foundation soil must be able to withstand conditions prevailing during its placement. In fact, some dynamic and static loads (puncturing, breaking and extension) occur during geotextile placement, and the resistance to such loading is simulated by following tests:

- Static puncture strength test

This procedure is used for simulating load exerted on geotextile during its placing and compaction by coarse-grained fill material.

- Tensile strength test

The relationship between the force and elongation is described in the tensile strength testing procedure. At that, some maximum tensile forces and elongations are defined due to their significance for the strengthening property of the geotextile. The testing is also significant for the placing of an overlying layer.

- Dynamic puncture strength test

This procedure simulates geotextile backfilling with sharp and coarse-grained fill material.

- Dynamic pyramidal puncture strength test

The dynamic pyramidal puncture test is used as a means to simulate variable stresses to which geotextile is exposed during compaction and repeated placing activities (especially in case small layer thicknesses are prescribed).

Requirements for geotextiles to be used for separation and strengthening

The following parameters are relevant for specifying mechanical requirements for geotextiles used in natural soil stabilization.

- type of soil,
- fill material,
- traffic load.

Tables 2-08.4-2 or 2-08.4-3 may be used with respect to the maximum grain size (dmax) of fill material and grain shape (round, square < 63 mm, or square > 63 mm), respectively.

Requirements from Tables 2-08.4-2 and 2-08.4-3 must be met with respect to the modulus of soil deformation EV1 and traffic load, respectively. Values given in Tables 2-08.4-2 and 2-08.4-3 are based on the strength of first layer 40 cm in thickness and on previously specified fill material.

Soil	EV1	Ms

U1	≤ 5 MN/m^2	≤ 6 MN/m^2
U2	5 - 15 MN/m^2	6 - 20 MN/m^2
U3	> 15 MN/m^2	> 20 MN/m^2

Table 2 - 1 Deformation and compressibility (Ms) moduli for soil classes U1 to U3

Three types of soil may be differentiated based on their modulus of deformation EV1 values (Table 2).

According to the Austrian RVS 3.63, there are two types of traffic load for every type of soil, i.e. the traffic load class LKL I-IV and the traffic load class V. In calculation, we have to bear in mind the fact that, in RVS 3.63, the LKL is taken as basis for calculating changes in equivalent load for the pavement structure design life of 20 and 30 years.

U	LKL as per RVS 3.63	Maximum tensile force	Maximum tensile elongation	Compression force by puncture test	Falling weight hole diameter testing	Static pyramid puncture test	Dynamic pyramid puncture test
		kN/m	%	N	mm	N	N
U1	LKL I-IV	≥ 23	>55	≥3850	<15	≥1000	≥660
	LKL V	≥ 21	>55	≥3500	<16	≥900	≥600
U2	LKL I-IV	≥18,5	>55	≥3000	<17	≥750	≥510
	LKL V	≥ 15,5	>55	≥2700	<21	≥660	≥450
U3	LKL I-IV	≥ 13,5	>55	≥2300	<23	≥560	≥390
	LKL V	≥11	>55	≥1850	<27	≥490	≥310

Table 3 - Mechanical requirements for geotextiles when fill material is made of rounded or angular grains with dmax ≤ 63 mm

U	LKL as per RVS 3.63	Maximum tensile force	Maximum tensile elongation	Compression force by puncture test	Falling weight hole diameter testing	Static pyramid puncture test	Dynamic pyramid puncture test
		kN/m	%	N	mm	N	N
U1	LKL I-IV	≥26	>55	≥4200	<14	≥1140	≥750
	LKL V	≥23	>55	≥3850	<15	≥1000	≥660
U2	LKL I-IV	≥21	>55	≥3500	<16	≥900	≥600
	LKL V	≥18,5	>55	≥3000	<17	≥750	≥510
U3	LKL I-IV	≥15,5	>55	≥2700	<21	≥660	≥450

	LKL V	≥13,5	>55	≥2300	<23	≥560	≥390

Table 4 - Mechanical requirements for geotextiles when fill material is made of angular grains with dmax > 63 mm

Values shown in Tables 3&4 are necessary (required) average values (nominal values). The maximum force should be increased by factor 4 for products presenting maximum tensile elongation of < 55%.

Filter (fill material)	Soil	Maximum tensile force	Maximum tensile elongation	Puncture test	Hole diameter
		kN/m	%	N	mm
Round or angular grain <63 mm	coherent	≥7	>55	≥1150	<34
Round or angular grain <63 mm	cohesionless	≥8,5	>55	≥1500	<30
Angular grain > 63 mm	coherent	≥8,5	>55	≥1500	<30
Angular grain > 63 mm	cohesionless	≥11	>55	≥1850	<27

Table 5 - Required mechanical properties of geotextile for filtering applications

Requirements for geotextiles to be used for filtering and drainage

Appropriate mechanical strength must be maintained and relevant requirements must be met (cf. Table 5) if geotextile is to be used in filtering and draining applications.

Values shown in this table are required average values (nominal values).

Hydraulic testing for geotextile selection

- Permeability

The geotextile must be sufficiently permeable to enable elimination of water from soil and to increase the shearing resistance. The permeability is tested perpendicular to the geotextile plane (permittivity Ψ) and in the plane (transmissivity Φ). Hydraulic values must be tested under various load conditions (normal stresses).

- Apparent opening size

The geotextile opening size is considered relevant for estimating long-term permeability and filtering capacity (mechanical and hydraulic continuity of filtering action). The apparent opening size is determined by submitting a specified type of soil to wet sieving in accordance with EN ISO 12956.

In the testing procedure, the geotextile assumes the role of a sieve.

The apparent opening size is determined by analyzing the passage of soil through geotextile, i.e. by measuring the soil retained on the geotextile. The efficient drainage of neighboring soil is ensured by the sufficient permittivity and transmissivity and by an appropriate opening size.

Requirements for geotextiles to be used for separation and strengthening

The following opening size range must be respected to ensure an appropriate continuity of mechanical filtering:

$$0.06 \text{ mm} \leq 090,w \leq 0.2 \text{ mm}$$

Requirements from Table 6 are applied for the hydraulic filtering continuity.

Permeability perpendicular to the plane	
kv	Permittivity ψ
(m/s)	$_s$-1
$\geq 1 \times 10^{-3}$	≥ 1

Table 6 - Hydraulic properties of geotextile used for separation and strengthening

Requirements for geotextiles to be used for filtering and drainage

Hydraulic properties presented in Table 7 must be met so that geotextile can be used as an appropriate filtering and draining agent.

Opening size O90, w	Permittivity	Transmissivity Ö at 20 kN/m^2
mm	$_s$-1	m^2/s
0,10 - 0,2	> 1	$> 5 \times 10^{-7}$

Table 7 - Hydraulic properties of geotextile used for filtering and drainage

Stability requirements

Environmental influences (ultraviolet radiation, chemical and biological influences) is proven by analyzing durability of geotextile, i.e. the maximum unrecoverable tensile force during the tensile test performed on a narrow strip after exposure to specified influences.

Resistance to ultraviolet radiation

An average value of maximum tensile force determined by tensile strength testing performed on wide strips according to EN ISO 10319 must not be reduced, after 360 hours of exposure to ultraviolet radiation, by more than 40 percent with respect to an average value.

Chemical resistance

An average value of maximum (tensile) force determined by tensile strength testing performed on wide strips according to EN ISO 10319 must not be altered, after keeping samples in solutions, by more than 30 percent with respect to an average value for an unstored sample.

Test methods

The following tests may be performed by a certification body in the scope of audit testing as specified in section below:

Mechanical test results are presented as average values. The following variation coefficients are permitted:

- wide strip tensile strength <15%
- puncture strength <15%
- mass per unit area <10%

In case of maximum anisotropic tensile force as determined during the wide strip tensile test, the relevant value is the minimum average value of maximum force in longitudinal, transverse and diagonal directions.

An average value of longitudinal, transverse and diagonal directions is given for elongation as established during the wide strip tensile strength testing:

$$\varepsilon = (\varepsilon long + \varepsilon trans + \varepsilon diag)/3$$

Index tests

The determination of index parameters (such as nominal thickness and mass per unit area) enables a simplified presentation of geotextiles. These values are not related to
quality. Test methods presented in section 3 are relevant for quality assessment. The following standards are applied:

EN 965:2001 Geotextile and geotextile related products - Determination of mass per unit area.
(EN 965:1995)

EN 964-1:2001 Geotextile and geotextile related products - Determination of thickness at specified pressures - Part 1: Single layers
(EN 964-1:1995)

Geotextile selection tests

Tests specified in Table 8 must be used to describe the quality of products:

No.	Testing	Parameter	Standard
1	Static puncture test	Force of plunger generated puncture	EN 12236-2001
2	Wide strip tensile method	Maximum tensile force (longitudinal, transverse, diagonal)	EN ISO 10319: 2001
	Wide strip tensile method	Maximum tensile elongation (longitudinal, transverse, diagonal)	EN ISO 10319:2001
3	Dynamic puncture test	Hole diameter	EN 918:2001
4	Dynamic pyramid puncture test	Dynamic force of puncture by pyramid	cf. Appendix
5	Determination of the	Apparent opening 090, w	EN ISO

	characteristic opening size		12956:2001
6	Determination of water permeability characteristics normal to the plane, without load	Permittivity Ψ	EN ISO 11058:2001
7	Determination of water flow capacity in their plane	Transmissivity Φ	EN ISO 12958:2001
8	UV stability	Reduction of maximum tensile force	EN ISO 10319, DIN 53 384, Procedure B (Global UV device)
9	Chemical stability	Change of maximum tensile force	EN ISO 10319 (keeping geotextile in solutions according to ONORM S 2073)

Table 8 - Tests/parameters/standards for geotextile selection

Product description

Technical sheet

The offer must be accompanied with a technical sheet in which all properties must be give. In addition, the sheet must also contain data about:

- product,
- manufacturer/supplier,
- manufacturing procedure and raw material,
- product group:
- nonwoven (type of strengthening, fiber length, e.g. infinitely long fibers, short cut fibers),
- woven (weaving method),
- sewn (binding method),
- composites (individual components).

Delivery note

The name of the manufacturer and the type of product should be indicated in the delivery note. The quantity, packing method and delivery date must also be indicated.

Product marking

The product is marked with an appropriate stamp and label. The geotextile stamping will consist of information about the type and contingent which will be apposed at regular intervals (no less than every 5 m).

The label on each roll must contain information about the manufacturer, type, raw material, mass per unit area and packing method.

Placing instructions

Preparation and placing

Rough soil irregularities must be leveled. The geotextile will be placed on a flat adequately prepared surface. For some uses of secondary significance (e.g. temporary placing), the geotextile may also be placed on a grassed surface.

Jointing methods

Individual sheets will be connected by overlapping, welding or sewing. Jointing must be performed in accordance with the manufacturer's instructions.

- Overlapping

The overlapping will depend on the geotextile's angle of friction and hence on the roughness of the geotextile surface. Smallest or minimum overlapping lengths are given in Table below.

	Nonwoven geotextile	Woven geotextile
Overlap	50 cm	80 cm

Table 9 - Minimum overlapping values

To prevent geotextile sliding at the place of overlap during filling operations, the overlap will be made in the direction in which material is placed.

Direction of fill operations

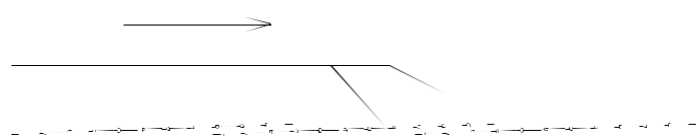

Figure 1 - Geotextile overlapping in the direction of filling operations

- Welding

Surfaces that have to be welded must be heated by wide gas burner or hot air. Immediately after that the welded spot must be covered with the unrolled geotextile and one roll will be connected with the other by walking along the contact. The welding can be performed only if the geotextile is dry.

- Sewing

An appropriate mechanical equipment and skilled workers are needed for sewing operations. In addition, this jointing method is the slowest.

First embankment layer placing and compacting

The first embankment layer is placed from the front side as driving over the geotextile should be avoided. In case of soil of poor bearing capacity
(E-1 <7.5 MN/m^2, i.e. < 15 MN/m^2) the compacted thickness of the first embankment layer must exceed by at least three times the maximum grain thickness, i.e. it should amount to at least 40 cm. The compaction method (static, dynamic) will be selected in accordance with properties of the foundation soil and fill material. The required layer thickness must be obtained on the entire width. When applicable,

all depressions (rutting occurrences) must be filled with appropriate material, and the embankment layer must then be recompacted over the entire width.

Quality assurance

Acceptability testing

The acceptability testing as specified in these GTR will be ordered by the manufacturer before the first use of the product. The raw material used in the fabrication of the product must be specified by the manufacturer. Any change in this respect must be promptly signaled to the competent authority. The acceptability testing will be conducted by a certification body. If the manufacturer changes one or several properties that are likely to significantly influence raw material components and jeopardize fulfillment of requirements specified in these GTR, a new acceptability testing will be performed. The acceptability testing includes all tests specified in Table 2-08.4-7.

Results obtained during the acceptability testing will be specified in the report in which it will be stated whether the manufacturer has fulfilled appropriate requirements. Acceptability test results will be presented together with the manufacturer's offer.

Production/manufacturing supervision

For each series of products a supervision contract will be concluded between the manufacturer and an accredited testing laboratory. The following tests will be included, as a minimum requirement, in such supervision contract:
EN 965
EN ISO 10319
EN ISO 12236
EN 964-1
EN ISO 12956
EN ISO 12958
EN ISO 11058

Every product series must be supervised at least twice a year when at least two types from the production series, as selected by the certification body, are tested. The entire production series must be tested within three years. The opening size and UV stability must be tested every year on one type selected from the production series.

Samples from production, i.e. from the manufacturer's warehouse, will be taken by a certification body. The certification body will also inspect manufacturer's production process and will prepare a report about these activities. The cost of acceptability testing and production supervision will be borne by the manufacturer.

Control tests

The Contractor's supervision consists of control tests that are conducted by the manufacturer and the certification body to determine whether the properties of the product comply with contract requirements and requirements contained in these GTR. The cost of control tests will be borne by the Contractor. The scope and the method used in control testing must be indicated in the QCQAP and in the quality assurance manual, and they will in any case be performed at least at every 10,000 square meters of geotextile placed. Test results will be recorded in appropriate minutes. In the scope of his supervising activities, the Contractor will be required to fulfill at least the minimum testing requirements and to perform this work in accordance with:

EN 965	Determination of the mass per unit area
EN ISO 10319	Wide strip tensile strength test
EN ISO 12236	Static puncture strength test
EN 964-1	Determination of thickness at specified pressures

In addition, each product type must be tested at least once a year in accordance with:

EN ISO 12956	Determination of characteristic
DIN 53 384 / Procedure B	aperture size UV stability test

Audit tests

In addition to permanent supervision of packing, labeling and marking of products, additional audit tests will be conducted as necessary, as well as some special tests if specified in the design or in the QCQAP. Such tests will be conducted at least at every 20,000 square meters, in accordance with the specified scope and method of testing. As a minimum requirement, audit tests will include testing in accordance with the following standards:

EN 965	Determination of the mass per unit area
EN ISO 10319	Wide strip tensile strength test
EN ISO 12236	Static puncture strength test
EN 964-1	Determination of thickness at specified pressures.

EN 918

	Audit tests will be conducted by a certification body in accordancewith these GTR.
EN 964-1	
EN 965 ONORM EN 30 318	Geotextiles and geotextile-related products - Dynamic puncture Test.
EN ISO 10319	Geotextiles and geotextile-related products - Determination of thickness at specified pressures - Part 1: Single layers
ONORM S 2073 ONORM S 2076 DIN 18 200 DIN 53 384	Geotextiles and geotextile-related products - Determination of the mass per unit area. Geotextiles and geotextile-related products – Terms
EN ISO 11 058	Geotextiles - Wide strip tensile strength test Storage piles; synthetic insulating strips; requirements and testing Storage piles; synthetic insulating strips; placing Quality control for construction materials, structural elements and construction methods, general notions Testing synthetic materials; simulation of natural conditions by exposure to UV radiation.
EN ISO 12 956 EN ISO 12 958	Geotextiles and geotextile-related products - Determination of water permeability characteristics normal to the plane, without Load.
EN ISO 12 236	Geotextiles and geotextile-related products - Determination of characteristic opening size. Geotextiles and geotextile-related products - Determination of water flow capacity in their plane. Geotextiles and geotextile-related products - Static puncture strength test.

3.10 EMBANKMENT CONSTRUCTION

Description of works

This work covers backfilling, spreading, sprinkling or drying, and leveling material on embankment in conformity with dimensions and grades presented in the design, as well as compaction in accordance with these GTR.

The work must be carried out in accordance with the design, appropriate regulations, Quality Control and Quality Assurance Program (QCQAP), Construction Management Design (CMD), Supervising Engineer's requirements, and these GTR.

Activities

Each layer of fill material must be spread horizontally in longitudinal direction or at a grade that must not exceed the longitudinal grade given in the design. The only exception can be made for construction of ramps descending to deeper valleys, in which case greater inclination may be allowed for embankment layers. In transverse direction, the embankment cross fall must be minimum in all phases of construction.

Every backfilled layer must be compacted in full width using an appropriate compaction equipment and devices. The compaction must be carried out from lower edge towards the higher edge.

The material must be transported over the embankment that has already been partly compacted, if possible always using a new path, so that the transport can partly contribute to an uniform compaction of embankment layers. The placing of a new layer may commence after the preceding layer has been sufficiently compacted, i.e. when the required level of its compaction has been proven by testing.

The height of each individual loose layer of fill material must be determined taking into account the type of fill material and the effective compaction depth of compaction equipment.
If there are is no valid prior experience with respect to compaction of a particular fill material, the thickness of fill layers will be determined at a test section.

In such cases, the testing will be made at the 50 m test section as follows:

The fill material of appropriate moisture content will be supplied to the testing location where it will be spread to the thickness that could theoretically be fully compacted by the compaction equipment used in these operations.

The layer will then be compacted by variable number of passes of compaction equipment, and the compaction level will be determined after a specified number of passes.

The compaction level will be tested on at least four locations out of which at least two should be in the lower half of the layer. The testing and analysis will be made in accordance with methods and instructions contained in these GTR.

Depending on test section results, the Supervising Engineer will approve a suitable work method and this by making an appropriate remark in the site diary. All costs relating to test section construction will be borne by the Contractor and this test section, if situated on the route itself and if the compaction level is satisfactory, will be approved as completed embankment.

The fill material will be placed onto the prepared foundation soil or onto the already placed embankment layer only after the Supervising Engineer has given his approval for the foundation soil or the previous embankment layer. After completion of the embankment, its slopes will be improved and leveled.

Quality control

Embankment dimensions must be checked during the work by comparing them with dimensions given in the design. A more detailed control is performed during acceptance of the top embankment layer (subgrade) by making measurements from the staked centerline of the road along the horizontal and vertical projection.

If it is established that the embankment slope inclination exceeds the corresponding values given in the design, the Supervising Engineer will have the right to require slope correction in accordance with the design. The slope inclination must be corrected by benches, using the same quality of materials, and the same compaction machines, until the required compaction level is reached. It is not allowed to reduce slope inclination by "gluing" a layer of material without compaction and without previous construction of benches.

The following regulations **(AASHTO)** are used as the basis for controlling quality of materials used in embankment construction activities:

Soil sampling
Soil sample moisture determination
Determining unit weight of soil
Determining bulk density of soil
Determining grain size distribution
Soil consistency limit determination. Atterberg limits
Determination of inflammable and organic matter content in soil

Optimum water content determination
Earthwork in road construction
Load bearing capacity and evenness at subgrade level

The following regulations are applied to control tests and audit tests:

Soil sampling
Soil sample moisture determination
Determining bulk density of soil
Compressibility modulus determination by bearing plate method

Control tests

These tests include determination of the compaction level with respect to Standard Proctor (**Sz**) or determination of compressibility modulus (**Ms**) by the bearing plate method (30 cm - depending on the type of material) at least at every 1000 square meters for each embankment layer, and determination of the grain size distribution for fill material at least at every 4000 cubic meters of completed embankment.

If the embankment is made of stone material obtained during blasting operations, the grain size distribution will be controlled in laboratory on material with the maximum grain of up to 10 cm in dia., while the proportion of individual fractions (10-40 cm) will be determined by visual control and assessment.

One out of five compaction testing results may be below the required minimum per one compaction series, provided that its absolute value does not deviate by more than:

- 5% when dry bulk density (γd) is measured,
- 10% when the modulus of compressibility (**Ms**) is measured.

If less then five tests are conducted in one test series, then all values (results) determined during the testing must be higher than the minimum value.

Test results will be presented by the Contractor to the Supervising Engineer and the latter will, if the results are satisfactory, accept control tests and permit construction of the next embankment layer.

Audit tests

These tests include determination of the compaction level with respect to Standard Proctor (**Sz**) or determination of compressibility modulus (**Ms**) by the bearing plate method (30 cm - depending on the type of material) at least at every 2000 square meters for each embankment layer, and determination of the grain size distribution for fill material at least at every 8000 cubic meters of completed embankment.

Calculation of work

The work required for the construction of embankment made of earth, mixed material and stone material, is measured in cubic meters of placed and compacted embankment.

The payment will be made according to the unit price which includes all works required for embankment construction - spreading, sprinkling or drying, compaction of embankment layers, leveling embankment slopes, and cleaning the area around the embankment.

3.10.1 CONSTRUCTION OF EARTH EMBANKMENTS

Earth materials are low to high plasticity clays, silts, clayey silts and similar materials sensitive to the presence of water (a portion of materials covered by the excavation class C).

These materials are compacted by sheepsfoot rollers, smooth rubber-tired rollers and vibratory plates.

The embankment will be built in layers ranging from 30 to 50 cm in thickness, and the maximum thickness of the loose layer will be determined through test sections, if no previous experience is available about layer thicknesses that can be properly compacted using appropriate compaction equipment. When determining suitability of earth material for embankment construction, it will be first of all necessary to test all materials from the cutting and borrow area, if that has not been done in the scope of geotechnical investigations, and to determine every change of material. At least two samples must be tested for every type of material.

The material for embankment construction must meet the following criteria:

- the grain size distribution of material must be such that the uniformity coefficient
- $U = \frac{d60}{d10}$ is greater than 9.

Materials with the uniformity coefficient of U ≤ 9 (such as uniformly graded sand) can also be used provided that a special placing technology (e.g. hydraulic dredging) is used.

- The fill material must not contain more than 6% of organic matter. If it contains from 6 to 10 percent of organic matter, its suitability for placing must be proven by detailed laboratory testing.

This requirement is valid for uniformly distributed and decomposed organic mater. Organic matter in pieces or clusters (such as wood or similar material) must be removed from fill material and discarded.

- The optimum quantity of water must be less than W_{opt} ≤ 25%.
- The dry bulk density of material (according to Standard Proctor test) must not be lower than γd = 1.50 g/cm^3 for embankments of up to 3.0 m in height, and γd = 1.55 g/cm^3 for higher embankments.
- The liquid limit of material must not be higher than W2 ≤ 65%.
- The plasticity index of material must not be higher than Ip ≤ 30.
- The swelling of material under water must not exceed 4% after four days.

- The Proctor number P_b=0 to 0.20

The material must not be used in embankment construction even when it complies with all of the above requirements if its moisture exceeds the limit of compliance with the prescribed quality of placing. The moisture of material must not vary by more than ± 2% from the optimum moisture as determined by Standard Proctor test. This means that an excessively moist material must be dried prior to placing (by spreading, fragmentation, relocation, exposure to sun or wind action), while the excessively dry material must be moisturized (by sprinkling or spraying) until the required moisture content is reached. Some time should be allowed to pass prior to compaction of the sprinkled material to allow for uniform distribution of moisture in the material.

When the embankment is built using a coherent earth material, all material transported to the site must be placed and compacted on the same day.

If, after compaction and testing of an embankment layer, the Contractor does not proceed with construction of the next layer, i.e. if the next layer is to be placed after a prolonged period of time and in different weather conditions, then it will be necessary to check once again the compaction level of the placed layer before proceeding to construction of the new layer.

The placing of the next layer may start only after the required quality (compaction level) of the previous layer has been proven.

The placing and compaction activities must be interrupted in case the required results can not be obtained (because of the rain, high ground water level or other unfavorable weather conditions).

The backfill material must not be placed onto a frozen surface. Similarly, the snow, ice or frozen earth material must not be incorporated in the embankment. Criteria for estimating quality of placed material are given in Table 10.

Position of embankment layers	Compaction level **Sz** (according to Standard Proctor test), minimum (%)	Modulus of compressibility **Ms** (plate 30 cm in dia.), minimum (MN/m^2)
a) Layers of embankments exceeding 2 m in height at the portion from embankment bottom to 2 m below the subgrade level	95	20
b) Layers of embankments less than 1 m in height and layers of embankments exceeding 2 m in height in the zone 2 m below the subgrade level	100	25

Table 10 - Quality criteria for earth embankment layers

CONSTRUCTION OF MIXED-MATERIAL EMBANKMENTS

The term mixed material denotes mixed stone and earth materials, clayey gravels, clayey rock scree and weathered rock material such as schist, marl, flysch, and similar, i.e. materials that are less sensitive to water action (most materials belonging to excavation class B and some of the materials belonging to excavation class C).

These materials will be compacted by rollers.

Embankments made of these materials are formed in layers ranging from 30 to 60 cm in thickness and, if there is no proven experience on layer thicknesses in which this material could be adequately compacted by an appropriate compaction equipment, the actual maximum thickness of the loose embankment layer will be determined by test section.

The material used in embankment construction must meet the following requirement:

- The grain size distribution of material will comply with the following uniformity coefficient:

$$U = \frac{d60}{d10} > 4$$

In case of materials that are likely to change grading during the compaction process, such as some types of weathered rocks, and if their uniformity coefficient can not be determined or is not realistic, then their suitability must be determined by practical means, i.e. by test sections.

Materials will not be placed in embankment in cases when the moisture level exceeds the limits within which the required quality of placing can be obtained.

The backfill material must not be placed onto a frozen surface. Similarly, the snow, ice or frozen earth material must not be incorporated in the embankment. Criteria for estimating quality of placed material are given in Table 11.

Position of embankment layers	Compaction level **Sz** (according to Standard Proctor test), minimum (%)	Modulus of compressibility **Ms** (plate 30 cm in dia.), minimum (MN/m^2)
a) Layers of embankments exceeding 2 m in height at the portion from embankment bottom to 2 m below the subgrade level	95	35
b) Layers of embankments less than 1 m in height and layers of embankments exceeding 2 m in height in the zone 2 m below the subgrade level	100	40

Table 11 - Quality criteria for embankments made of mixed materials

CONSTRUCTION OF ROCK EMBANKMENTS

Rock materials are materials obtained by blasting, scree materials and gravels, i.e. those materials that are practically insensitive to the presence of water (materials belonging to the excavation class A and a portion of materials from the excavation class C).

These materials will be compacted by vibratory rollers (self-propelled and towed), vibratory tampers and compactors, depending on the type of material.

Embankments made of these materials are formed in layers ranging from 50 to 100 cm in thickness and, if there is no proven experience on layer thicknesses in which this material could be adequately compacted by an appropriate compaction equipment, the actual maximum thickness of the loose embankment layer will be determined by test section.

The material used in embankment construction must meet the following requirement:

- The grain size distribution of material will comply with the following uniformity coefficient:

$$U = \frac{d60}{d10} > 4$$

- The maximum grain size must not exceed one half of the layer thickness, and will in no case be greater than 40 cm (but 15% of grains may be up to 50 cm in size).

In the vicinity of structures, the Contractor will in most cases have to change his placing and compaction procedures because big vibratory machines may cause significant damage to old and new structures alike. For this reason, the approval of the Supervisory Engineer will be required for machines, methods and start of compaction in the vicinity of structures.

No embankment construction work will be allowed when the backfill material is frozen, i.e. when there is snow or ice on the route. Criteria for estimating quality of placed material are given in Table 12.

Position of embankment layers	Compaction level **Sz** (according to Standard Proctor test), minimum (%)	Modulus of compressibility **Ms** (plate 30 cm in dia.), minimum (MN/m^2)
a) Layers of embankments exceeding 2 m in height at the portion from embankment bottom to 2 m below the subgrade level	95	40
b) Layers of embankments less than 1 m in height and layers of embankments exceeding 2 m in height in the zone 2 m below the subgrade level	100	40

Table 12 - Quality criteria for embankments made of rock materials

PREPARATION OF SUBGRADE

Description of work

This work includes preparation of subgrade in cuttings, embankments and side-cuts, i.e. coarse and fine leveling of material and compaction to required compaction levels. The subgrade must be prepared in accordance with levels shown in the design.

The work must be carried out in accordance with the design, appropriate regulations, Quality Control and Quality Assurance Program (QCQAP), Construction Management Design (CMD), Supervising Engineer's requirements, and these GTR.

The subgrade is the final layer of embankment or cutting. It must be of uniform load-bearing capacity, and is up to 50 cm in thickness, depending on the type of material.

Quality control

Quality control activities for the preparation of subgrade are carried out in accordance with the following regulations:

Soil sampling
Determining moisture content of soil samples
Determining unit weight of soil
Determining bulk density of soil
Determination of the grain size distribution
Determination of soil consistency limits (Atterberg limits)
Determining change of soil volume
Determining content of inflammable and organic materials in soil
Optimum water content determination
Determining the California bearing ratio (CBR)
Subgrade carrying capacity and evenness

The control tests and audit tests will be carried out in accordance with the following regulations:

Soil sampling
Determining moisture content of soil samples
Determining bulk density of soil
Compressibility modulus determination by bearing plate method

Control tests

These tests cover determination of the level of compaction according to the Standard Proctor test procedure (**Sz**) and determination of the compressibility modulus (**Ms**) by bearing plate (30 cm).

The minimum control tests are:

- one compaction level testing per every 1,000 square meters,
- one compressibility modulus testing per every 1,000 square meters,
- one subgrade grading determination per every 6,000 square meters,
- one compaction level testing and compressibility modulus testing per every 200 m in the shoulder zone.

Subgrade levels may not differ from the design levels by more than 3 cm. Cross slopes and longitudinal grades of the subgrade must be in accordance with levels presented in the design. The evenness is measured in the longitudinal, transverse and diagonal directions.

The level of the finished subgrade will be proven by leveling record. The evenness of the finished subgrade must be such that, in case of cohesive material, the tolerance in any direction is not greater than 3 cm when measured by leveling rod 4 m in length.

The evenness testing and the cross slope testing will be conducted for subgrade at every 100 m.

The attained compaction level will be checked after the subgrade level has been approved.

While testing quality of subgrade preparation, the tests are preformed in series and at least five tests will be conducted in every series. It is only in such cases that the following tolerances will be allowed.

One out of five results may fall below the required minimum but, acceding to its absolute value, it must not

deviate by more than:

- 5% with respect to the required mass in dry state (γd),
- 10% with respect to compressibility modulus (Ms),

If less than 5 tests are performed per one series, then test results must exceed the required minimum.

The Contractor is required to present test and measurement results to the Supervising Engineer and the latter will, in case he finds the results satisfactory, approve control tests and allow commencement of pavement construction work on the subgrade.

Audit tests

These tests consist of the compaction level testing according to the Standard Proctor test procedure (**S**z) which will be conducted at least at every 2,000 square meters, and determination of the compressibility modulus (**M**s) by bearing plate (30 cm) which will be conducted at least at every 2,000 square meters of prepared surface of the subgrade.

The subgrade in the shoulder zone will be tested separately. This testing will be conducted at every 400 m using either of the above two methods. The grain size composition of the subgrade material will be tested at least at every 10,000 square meters.

Calculation of work

The work relating to the preparation of subgrade made of earth, mixed and stone material will be measured in square meters of the prepared and compacted subgrade (Sections below).

The payment will be made according to contract unit prices which include all activities needed to prepare the subgrade, depending on the type of material, as indicated in Sections below, provided that this item is included in the contract cost estimate. If not included in such cost estimate, the work will be included in the price for the construction of embankment layers.

3.10.2 PREPARATION OF SUBGRADE MADE OF EARTH MATERIALS

Earth materials are low to high plasticity clays, silts, clayey sand materials and similar materials sensitive to the presence of water (a portion of materials belonging to the excavation class C).

Backfill material for subgrade on embankment or in cutting must be compacted without delay. If an already compacted subgrade has been exposed for some time to bad weather, the Contractor will be required to make all actions that are needed to bring the subgrade to the state as required in the design and as specified in these General Technical Requirements. The work for the preparation of subgrade in earth materials includes leveling, local replacement with better quality material (if necessary), as well as the sprinkling or drying to the required compaction level.

If compaction is impossible due to high natural moisture or unfavorable weather conditions, then one of the improvement methods indicated in the section on foundation soil improvement should be used. Such an improvement method will be selected by the Contractor, and approved by the Supervising Engineer.

Materials for the preparation of subgrade made of earth materials must meet the following criteria:

- uniformity coefficient $U = \frac{d60}{d10}$ must be higher than 9,
- liquid limit W2 must be below 40 percent,
- plasticity index Ip must be below 20 percent,
- swelling after 4 days of immersion in water must not exceed 3 percent,
- California bearing ratio CBR must be greater than 3 percent.

The moisture of material must not vary by more than ±2% from an optimum moisture content (as determined by Standard Proctor procedure).

If in side cuts the earth material does not meet acceptability criteria, then the poor material in subgrade must be replaced in the same way as indicated for the replacement of poor foundation soil (2-08.2, 2-08.3 and 2-08.4), which is in most cases combined with the use of geotextile. Subgrade preparation activities must not be carried out when the soil is frozen, i.e. when there is snow and ice on the route.

The following criteria will be used for estimating quality of the subgrade made of clayey materials:

- compaction level according to the Standard Proctor procedure must be Sz ≤ 100%,
- compressibility modulus measured by bearing plate 30 cm in dia. must be Ms ≥ 30 MN/m^2.

3.10.3 PREPARATION OF SUBGRADE MADE OF MIXED MATERIALS

The term mixed materials denotes mixed stone and earth materials, clayey gravel, clayey rock scree, weathered rock - schist and marl, flysch material, and similar materials (most materials belong to the excavation class "C" while some of them belong to the excavation class "B").

Activities for the preparation of the subgrade made of mixed materials include leveling, local replacement with better quality material (if necessary), possible sprinkling or drying, and compaction to the required density.

When the subgrade material in cutting is highly cohesionless (stone with clay pockets), the excavation must be deepened by 30 to 50 cm and a layer of homogeneous mixed or stone material must be placed.

The material for subgrade composed of mixed materials must meet the following requirements:

- uniformity coefficient $U = \frac{d60}{d10}$ must be higher than 9,
- maximum grain size is 60 mm (up to 70 mm is allowed for 10% of grains)

The moisture of material must not vary by more than ± 2% from an optimum moisture content (as determined by Standard Proctor procedure).

No work shall be performed on subgrade when the soil is frozen, i.e. when there is snow or ice on the route.

The following criteria are used for estimating quality of subgrade composed of mixed materials:

- compaction level according to the Standard Proctor procedure must be Sz ≥ 100%,
- compressibility modulus measured by bearing plate 30 cm in dia. must be Ms ≥ 35 MN/m^2.

3.10.4 PREPARATION OF SUBGRADE MADE OF STONE MATERIALS

The term stone materials denotes materials obtained by blasting, stone scree materials and gravels (i.e. materials belonging to excavation class "A" and some materials belonging to excavation class "C").

The work relating to the preparation of the stone-material subgrade in cuttings includes smoothing all remaining stone protrusions, backfilling and spreading a leveling layer made of clean fine-grained stone material, its leveling, sprinkling and compaction to the required density.

When stone is used as backfilling material, the final layer must be leveled using a fine-grained stone material.

The quality of this leveling layer must be checked before it is placed.

The material for subgrade composed of stone materials must comply with the following requirements:

- uniformity coefficient $U = \frac{d60}{d10}$ must be higher than 9,
- maximum grain size is 60 mm (up to 70 mm is allowed for 10% of grains)

No work shall be performed on subgrade when the soil is frozen, i.e. when there is snow or ice on the route.

The following criteria are used for estimating quality of subgrade composed of stone materials:

- compaction level according to the Standard Proctor procedure must be Sz ≥ 100%,
- compressibility modulus measured by bearing plate 30 cm in dia. must be Ms ≥ 40 MN/m^2.

3.11 WEDGE CONSTRUCTION NEXT TO STRUCTURES

Description of work

This work covers backfilling, spreading and compaction of loose material next to structures, i.e. construction of the so called wedges. The wedges will be constructed in accordance with plans contained in the design, and in keeping with these General Technical Requirements (GTR).

The work must be carried out in accordance with the design, regulations, Quality Control and Quality Assurance Program (QCQAP), Construction Management Design (CMD), instructions given by the Supervising Engineer, and these GTR.

Material

According to its quality, the material must correspond to materials used for base courses of pavement structures, i.e. it must be a granular stone material without binder, as specified in Sections of these GTR.

Activities

The size of wedges depends on the height of the adjacent structure and the length of the approach to the structure. The front of clay fill is realized from both sides at an inclination of 1:3 towards the structure, so that the slope at the front of embankment starts from the abutment of the facility.

If the embankment next to the structure is made of stone material, the slope at the front of embankment can be realized at an inclination of up to 1:1.

If an embankment of more than 2 m is to be built above the structure, the wedge adjacent to the structure should be realized only up to 0.5 m above the structure. In such a case, the wedge may be realized using stone material ranging from 0 to 15 cm in size.

Wedges adjacent to structures are built in layers 50 cm in max. thickness. The compaction of material is performed using appropriate vibrating equipment, including sprinkling as appropriate. The compaction method should be such that no damage is caused to the structure and its waterproofing.

Quality control

The quality control is performed by the Contractor who will in this respect test compaction level for each layer of the wedge. The modulus of compressibility (Ms) according to the 30 cm bearing plate method will

be tested (according to EN). If the counterweight can not be used due to space restrictions, the compaction level will be tested by determining the compaction level (Sz) according to the Standard Proctor procedure. Depending on the size of wedge, at least two tests will be performed for every layer. The following criteria will be used for estimating quality of placed material:

- at the depth of more than 4.0 m below the pavement structure

Msmin. = 60 MN/m^2 or **Sz** min. = 97%,

- at the depth from 0.5 to 4.0 m below the pavement structure

Msmin. = 70 MN/m^2 or **Sz** min. = 100%,

- at the depth of up to 0.5 m below the pavement structure

Msmin. = 80 MN/m^2 or **Sz** min. = 100%.

If the requirement for the compaction of mechanically compacted base courses contained in road pavement structures is less than Msmin = 80 MN/m^2, then they should be compacted in the gravel wedge zone to the compressibility modulus of Msmin = 80 MN/m^2 or to the compaction level of Szmin = 100%.

Calculation of work

This work will be measured in cubic meters of material placed in wedge zones. The payment will be made according to the contract unit price which includes supply, transport and placing of materials, and cleaning of the surrounding area, all in accordance with this Section of General Technical Requirements.
If these works are not expressly specified in the design, they shall be deemed as included in the construction price for the structure.

3.12 DISPOSAL OF MATERIALS

The work covers shaping and forming disposal sites, and includes all activities that are needed to ensure their stability and to make them compliant with their natural environment.

The work must be carried out in accordance with the design, regulations, Quality Control and Quality Assurance Program (QCQAP), Construction Management Design (CMD), instructions given by the Supervising Engineer, and these GTR.

Activities

Material will be transported to the place of disposal:

- when there is an excess of excavation material,
- when it is determined that the excavation material is not suitable for road embankment construction,
- when, because of the time schedule, it would not be cost-effective to wait for embankment construction by material coming from excavation.

The Contractor is required to form disposal sites at places specified in the design or as directed by the Supervising Engineer.

In urban areas, the excess material will be transported to municipal disposal sites. If new disposal sites are to be formed and unless otherwise specified, the general principle is to use locations favorable for the creation of parking lots and vista points.

When enlarging the existing and forming new disposal sites, a special care must be taken to provide for an appropriate drainage around the disposal site and at the disposal site itself, so as to avoid formation of landslides or any slope damage due to erosive action of rain and seepage water.

It will also be necessary to take into account geotechnical properties of the terrain on which larger disposal sites are to be formed, in order to prevent formation of landslides and other types of soil degradation.

Disposal sites must be leveled and shaped in accordance with the design or as directed by the Supervising Engineer.

In cases where natural grass planting is not possible, the grass will be planted artificially if requested by the Supervising Engineer.

The Client will bear all costs of land purchase and compensation costs with respect to all disposal sites shown in the design or specified by the Supervising Engineer. The Contractor will bear the cost of compensations relating to the damage to agricultural crops or land situated outside of such disposal sites. The Contractor will also bear all costs relating to disposal sites formed without prior approval of the Supervising Engineer.

Calculation of work

The work is measured in cubic meters of excavation. The work will not be paid for as a separate item, but is included in the unit price for excavation and hence the Contractor is not entitled to any additional compensation in relation to this work.

If, according to the design, the disposal site is to be used for a specific purpose (parking lot, vista point, noise protection barrier, etc.), the work will be paid for according to the description of works to be realized on the project.

3.13 PROTECTION OF SLOPES AND OTHER AREAS EXPOSED TO EROSION

General

The protection of slopes and other areas exposed to erosion will be carried out in accordance with appropriate solutions presented in the design, which will be applied during construction of cuttings, side cuts, embankments, grassed median areas, etc.

The work must be carried out in accordance with the design, regulations, Quality Control and Quality Assurance Program (QCQAP), Construction Management Design (CMD), instructions given by the Supervising Engineer, and these GTR.

Prior to the commencement of this protection work, appropriate actions relating to slope stability must be taken:

- slopes must be realized with such inclinations that ensure an appropriate stability of the terrain and prevent subsequent settlement (deformations),
- slopes made unstable due to water action must be improved by appropriate stabilization measures,
- surface and ground waters affecting the site must be directed in a controlled manner towards the surrounding areas or appropriate depressions in the surrounding terrain, and this by means of appropriate semicircular channels or drainage ditches,
- embankment toes and top parts of slopes in cuttings will be realized in form of an circular arch, unless otherwise specified in the design,

- embankment or cutting slopes will be scarified in order to increase roughness and ensure better adhesion of vegetation cover, and smooth surfaces will horizontally be roughened with appropriate implements (rakes, etc.).

After construction of embankments, cuttings and other road structures, and after taking all basic stability measures, the slopes must be protected without delay in accordance with appropriate protection methods.

3.13.1 SLOPE PROTECTION BY TOPSOIL PLACING AND GRASSING

Description of work

This work comprises protection of embankments, cuttings and grassed median areas that are affected by small quantities of water, and this by applying topsoil material and seeding grass in areas specified in the design or as directed by the Supervising Engineer.

The use of this type of protection is also dependent on pedologic properties of the terrain. The actual topsoil layer thickness will be defined by the Supervising Engineer.

Activities

Before proceeding to this protection, the Contractor is required to meet basic slope stability requirements as specified in these GTR.

Active topsoil material free from branches, roots, stone and other materials detrimental to the growth of vegetation, will be used.

The topsoil material will be applied starting from slope bottom and advancing towards the top. The topsoil thickness is usually specified in the design. If this is not the case, the topsoil thickness will range from 0.15 to 0.25 m for slopes, while its thickness will be up to 0.45 m in median areas.

The topsoil will be leveled and compacted with lightweight tampers. The grass will be planted on an adequately prepared topsoil layer. The type of grass and grass mixtures will be selected taking into account environmental features of the region to ensure proper growth of vegetation. The quantity of seed will vary from 5.1 to 8.0 g per square meter, while for fertilizer it will be about 80 g per square meter.

After the topsoiling and seeding activities, the seeded area shall be properly cured to ensure adequate growth of vegetation, and the areas will be mowed one of two times, as necessary.

Quality control

The Contractor shall submit to the Supervising Engineer analysis results confirming that he has selected an appropriate type of grass and fertilizer, and shall also submit the results confirming quality of proposed seed. Surfaces protected with topsoil material and grass will be approved based on the area actually covered with grass of uniform density, fresh color and healthy appearance.

Calculation of work

The work for the protection of slope with topsoil material and grass will be calculated in square meters, according to work that has actually been realized, and the payment will be made based on unit prices presented in the contract.

The unit price includes all material that is needed for this type of protection and for the work as described in this Section.

3.13.2 SLOPE PROTECTION WITH GRASS COVERS - HYDROSEEDING

Description of work

This work is related to the establishment of grass cover by hydroseeding, which is a good stabilization and protection method for cuttings, embankments, side cuts, shoulders, and various steep and inaccessible types of terrain. This kind of protection may be specified in the design or will be performed at the request of the Supervising Engineers with the approval of the Designer.

Materials

Appropriate grass mixtures combined with high-molecular-weight polymer emulsions and water, to which appropriate fertilizers and cellulose are added, will be used for this type of protection. The hydroseeding is based on the exclusive use of grass types presenting novel properties: low growth of the plant, poor reproductive capability, high resistance to environmental influences, and a very strong and well developed root system which guarantees a good protection against erosion.

Activities

This protection is most often applied without prior preparation of topsoil material and without any other preparation, and this on surfaces of every type and on all types of soil, regardless of its pedological composition. This can be soil without a vegetable layer, sterile and devastated type of soil (sand drifts, river deposits, quarries, embankment materials, industrial waste deposits, coal, slag, overburden, etc.). The lack of vegetable matter and physiologically active nutrients in such soil is compensated by organic vegetable-peat compounds contained in the basic suspension. This protection is applied in stages.

Prior to the commencement of work, the terrain is investigated to determine general environmental and vegetative properties of the area. At this time, general properties of soil are established and objectives to be accomplished by the hydroseeding are set. This serves as a basis for defining the mix formula and technology of work. The hydroseeding is performed by a special machine characterized by a great operating radius which ejects the mix composed of various components onto the surface of the soil. Best results are obtained in the treatment of large areas. After the soil has been treated by hydroseeding, it is protected until an appropriate grass cover is established. In areas where the grassing is unsuccessful, the Contractor will be required to repeat the procedure.

Calculation of work

Slope protection with grass cover by means of hydroseeding is calculated in square meters of adequately formed grass cover, and the payment will be made according to contract unit prices.

The unit price comprises the supply, appropriate equipment and all necessary work and material as described in this section, as well as an appropriate cure until the acceptance of the works.

3.13.3 SLOPE PROTECTION BY WIRE FABRIC

Description of work

This work comprises protection of slopes in rocky terrains by placing mesh in unstable areas where cave-in or collapse could otherwise be expected. Specific areas in which such protection will be made are specified in the design or are defined by the Supervising Engineer.

Material

Steel wire fabric or polymer fabric is used in this type of protection. The steel wire fabric has hexagonal

openings with triple wire thread. The steel wire is galvanized to increase durability and corrosion resistance. The wire ranges from 1.2 to 3.1 mm in diameter, and the size of the openings is 50-100 mm. At end sections of the mesh, the wire diameter is greater (from 1.4 to 4.0 mm). The width of the fabric depends on the planned use and may vary from 1.0 to 3.0 m, and is delivered in rolls 25.0 m in length.

Steel anchors 10 to 12 mm in diameter are used for fixing the fabric to the slope. Individual anchors are spaced at 2.0-3.0 m intervals. The anchors are fixed to the slope rock to the depth of approximately 0.50 m. The top end of the fabric may also be attached to the concrete beam built into the slope, while the bottom end is fixed by anchors or concrete weights.

The Contractor is required to obtain from the certification body an appropriate documentation for all materials, and is furthermore required to submit this documentation to the Supervising Engineer for inspection and approval.

Activities

Prior to this protection, the slope must be cleaned from loose and unstable material and all rough irregularities must be leveled. The fabric will be placed once these activities are completed.

The fabric will be fixed in place by anchors.

Concrete weights at the bottom portion of this protection enable removal of all debris and accumulated material. Mesh units are linked to one another by means of galvanized or plasticized wire.

Calculation of work

The slope protection with wire fabric will be calculated per square meter based on work actually performed, and the payment will be made according to contract unit prices.

The unit price includes supply, transport, placing and all work and material as described in this section.

3.14 CONSTRUCTION OF SHOULDERS

Description of work

This work covers construction of shoulders in accordance with the design. The following shoulder types are considered:

- shoulders made of mechanically stabilized granular material,
- topsoiled and grassed shoulders,
- concrete shoulders,
- shoulders with raised curbs,
- shoulders constructed with bituminized nonwoven textiles.

The work must be carried out in accordance with the design, appropriate regulations, Quality Control and Quality Assurance Program (QCQAP), Construction Management Design (CMD), Supervising Engineer's requirements, and these GTR.

Materials

- stone material will be non-segregated stone material suitable for placing,
- topsoil must comply will requirements defined in these GTR,
- concrete for shoulders must be concrete class C 25/30.

Quality control

Control tests

These tests comprise tests that will be conducted on shoulders (without topsoil) in order to determine the modulus of compressibility (Ms) with bearing plate 30 cm in diameter, in accordance with the EN standard. The testing will be performed at every 100 m and the results will have to comply with requirements defined in these GTR.

The Contractor is required to submit measurements and test results to the Supervising Engineer who will, if results are satisfactory, approve the testing and the next phase of work.

Audit tests

These tests comprise tests that will be conducted on shoulders (without topsoil) in order to determine the modulus of compressibility (Ms) with bearing plate 30 cm in diameter, in accordance with the standards. The testing will be performed at every 200 m and the results will have to comply with requirements defined in these GTR.

3.14.1 CONSTRUCTION OF SHOULDERS MADE OF GRANULAR STONE MATERIAL

Activities

Construction work for shoulders made of granular stone material may commence only after the Supervising Engineer has approved the underlying layer (embankment) and the base course and has thus confirmed their compliance with requirements concerning the compaction, grades, levels and functionality of drainage.

The thickness of shoulders made of granular stone material is defined in the design, and is dependent on the thickness of pavement layers.

The compaction will be made by means of an appropriate roller. The compacted surface of the shoulder must have a mosaic-shaped texture. The shoulder surface must be up to one centimeter lower than the edge of pavement level specified in the design. The shoulder must have the load carrying capacity as indicated in the design.

The actual compacted layer thickness may deviate from the thickness specified in the design by no more than ± 1 cm.

Calculation of work

The shoulder construction will be calculated per linear meter of work actually performed, and the payment will be made according to contract unit prices.

The unit price covers supply, mechanical work and all work and material required for the full completion of the shoulder.

3.14.2 CONSTRUCTION OF TOPSOILED AND GRASSED SHOULDERS

Activities

The backfilling of topsoil material may commence only after the Supervising Engineer has approved the underlying layer (embankment) and the base course and has thus confirmed their compliance with requirements concerning the compaction, grades, levels and functionality of drainage.

The topsoil layer thickness is defined in the design, and may vary from 5 to 15 cm. Once the topsoil layer has been placed, the shoulder surface must be leveled within an accuracy of plus or minus 2 cm and then rolled with a lightweight static roller in one compaction pass. After that, the shoulder shall be grassed in full compliance with these General Technical Requirements.

Calculation of work

The work will be measured in meters of fully completed and grassed shoulder, and the payment will be made according to contract unit prices.

The unit price will include supply and leveling as well as all the work, material and transport required for the full completion of the shoulder.

3.14.3 CONSTRUCTION OF CONCRETE SHOULDERS

Activities

Concrete shoulders will be made on stone embankments whenever specified in the design. The construction work may commence only after the stone material bedding (embankment) has been completed in accordance with embankment construction requirements, leveled within an accuracy of plus or minus 3 cm, and approved by the Supervising Engineer. The concrete shoulder will be made on such bedding using concrete class of no less than C 25/30. The actual concrete class shall be specified in the design.

The quality of the concrete, construction work and inspection work must comply with appropriate requirements as specified in Volume IV of these GTR.

Dimensions - concrete layer thickness and shoulder width - will be determined at every 100 m.

Joints will be made in concrete shoulder at every 5 meters or less, as indicated in the design.

Calculation of work

The work will be measured per meter of completed shoulder. The payment will be made according to contract unit prices. The price will include all elements as required for the full completion of the shoulder.

4. DRAINAGE

4.1 GENERAL REMARKS

This section specifies minimum quality requirements for materials, products and works as applied during realization of drainage activities. The GTR are written in such a way that they form a part of the contract while requirements relating to special works are included in the contract as Special Technical Requirements (PTU).

Materials, products, equipment and works must comply with the standards and technical regulations specified in the design documentation. If no standard is specified, then an appropriate EN (European standard) must be applied. If a standard or regulation becomes invalid during realization of the project, it will be substituted by an appropriate replacement standard or regulation.

The Contractor may propose application of generally recognized technical rules (standards) issued by a foreign standardization body (such as ISO, EN, DIN, ASTM, etc.), subject to written explanation and approval of the Supervising Engineer. This change may be accepted by the Supervising Engineer if approved by the Designer. The Contractor is required to register this change in the working design.

4.1.1 DEFINITIONS

General terms and expressions, with the meanings they have in these General Technical Requirements, are presented in Section 1. The following terms are additional terms that are especially relevant to this section.

Ditches are artificial depressions in soil which receive surface water coming from road pavement, cutting or embankment, and carry this water to culverts, watercourses, ravines, etc. Ditches are realized as structures of segmental, trapezoidal or other type of cross section. They may be either lined or unlined.

Underdrains are underground structures that are used for the collection and evacuation of seepage water from the pavement structure, surrounding natural terrain and ground water.

Road culverts are structures that are used for evacuation of smaller quantities of water.

Separators are devices designed in such a way that they enable reception and evacuation of rainwater, but retain harmful effluents.

Road drainage is a system of evacuation of rainwater from the road pavement, shoulders and cutting slopes by means of various surface drainage elements (curb, gutter and drain with grating) giving access to manholes and from there to other parts of the drainage system. The road drainage system may be either a closed or open type system.

Manhole is a circular or rectangular structure, equipped with cover, that is used for reception of rainwater or seepage water, and for inspection of the drainage system.

Drains (water inlets) are circular or rectangular structures, equipped with gratings, that receive rainwater coming from road surface.

4.2 SURFACE DRAINAGE

General

Rainwater coming to the roadway from the surrounding terrain, regardless of whether the route is in cutting or on embankment, must be collected in boundary channels (ditches) at the edge of the cutting or at the foot of the embankment, and the water thus collected shall be evacuated outside of the road area.

The ditches will be of segmental, trapezoidal or other type of cross section, as defined in the design. The ditches may be lined or unlined.

The bottom of the ditch situated at the foot of the embankment, at any type of road profile, will have to be lower by at least 30 cm than the outside edge of the lowest base course of the pavement.

If this condition can not be met for any reason, than the closed system of drainage must be established.

The work must be carried out in accordance with the design, appropriate regulations, Quality Control and Quality Assurance Program, Construction Management Design, Supervising Engineer's requirements, and these GTR.

4.2.1 DRAINAGE DITCHES

The work covers excavation of ditches, transport or spreading of excavated material along the foot of embankment or next to the edge of cutting, in natural soil of class A, B or C, and lining of these ditches with various materials: stone, sods and concrete (either prefabricated or prepared in situ).

If possible, the excavated material will be spread within the roadway area, or it will be transported to the place of disposal where it will be spread as appropriate.

The measurement and calculation of excavation work will be performed in accordance with these GTR.

According to the type of lining, the ditches may be classified as follows:

- drainage ditch without lining,
- drainage ditch lined with concrete (monolithic lining),
- drainage ditch lined with concrete (prefabricated elements),
- drainage ditch lined with sods.

Ditches will longitudinal grade in excess of 10 percent must be realized with steppings in order to reduce such grade.

Provisions contained in Sections of these GTR are applicable to excavation work so that the calculation of such works is defined in these sections.

The compliance of the prepared bottom compaction level with design requirements, will be verified, prior to the installation of ditch lining, by testing compressibility modulus in the scope of control tests, by bearing plate method or by measuring compaction level by defining bulk density of soil at every 100 linear meters of prepared ditch bottom, in accordance with EN and ARDM.

If the longitudinal grade of the ditch exceeds two percent but is lower than ten percent, the ditch will have to be protected with lining that is resistant to erosion.

4.2.2 DITCH WITHOUT LINING

Drainage ditches without lining may be excavated in all classes of natural or loose soil as indicated in the design.

These ditches collect the surface water from road pavement and from the cutting or embankment, and carry this water to culverts, watercourses, ravines, etc.

Ditches without lining will be built to grades varying between 0.2 to 2 percent, and the cross section will be as specified in the design.

Quality control

Ditches must be realized in full accordance with the design, especially with respect to their longitudinal grade. Local irregularities of ditch bottom, i.e. places where water may accumulate, will not be permitted.

Ditches will be accepted by elevation measurements at every design profile or more often if necessary, and every deviation in excess of 5 cm will not be accepted.

The inclination of ditch slopes and the longitudinal grade of the ditch bottom must be uniform along the entire length of the ditch.

Calculation of work

The work will be calculated per cubic meter of actual ditch excavation, based on the class of soil. The item includes excavation, spreading or transport of material to the place of disposal, fine trimming of slopes and channel bottom, and all work, in full accordance with these GTR.

4.2.3 DITCH LINED WITH CONCRETE - MONOLITHIC CONSTRUCTION

Description of work

The work covers excavation of ditches in loose or natural soil regardless of soil class, spreading or transport of surplus material to the place of disposal, preparation of bedding for the concrete lining and construction of concrete lining of required quality, wih dimensions as specified in the design.

The excavation work will be measured and calculated in accordance with these GTR.

The ditch lining will have to be impermeable in well areas and if longitudinal grade of the ditch is less than 2%.

These ditches will be excavated with appropriate machinery in all classes of soil, while manual excavation will be made only in exceptional cases. The trimming of ditch slopes and ditch bottom to the required lines in zones where the ditch caved-in or was realized in an inadequate manner, will be done manually.

Prior to the construction of concrete bedding, the Supervising Engineer will approve the excavation work, after which the bedding for concrete lining may be realized.

The bedding will be realized with natural or crushed sand or fine-grained gravel, which will be spread in a layer as specified in the design, and the lining will be concreted in an appropriate formwork and the fresh concrete will be vibrated and cured as appropriate. The lining will be realized in sections. If the concrete is placed manually, the joints will be realized by placing inserts at the end of each section.

If the concrete is placed mechanically, the joints will be made by pressing-in the inserts mechanically, or by cutting the semi-hardened concrete lining as specified in the design or according to directions given by the Supervising Engineer.

If the profile of excavated ditches is affected by bad weather conditions, the lining work must be carried out immediately after excavation of shorter sections of the ditch.

The concrete will be cured by sprinkling completed surfaces with water or with appropriate chemical substances that prevent evaporation of moisture from fresh concrete, and by covering fresh concrete with moisture-retaining materials.

Completed joints must be filled with crushed stone sand 0/4 mm in size, or with an appropriate joint sealing compound.

The joint sealing compound must meet the following basic requirements: plasticity, permanent resistance to solar radiation, water permeability, resistance to aggressive action of water or other effluents in case this ditch receives water from road surfaces.

After completion of all works, the ditch and the surrounding area have to be cleaned along the entire length of the ditch.

The concrete class C 25/30 (M30) will be used in the fabrication of the concrete lining.
The concrete must comply with quality requirements as specified in the design.

Quality control

The ditch must be excavated in accordance with cross sections, elevations and grades as specified in the design.

The ditch will be excavated to the levels enabling realization of the concrete lining as specified in the design. Deviations that would change the concrete lining thickness by more than 10 mm will not be allowed.

The concrete lining surface must be leveled and compacted in accordance with requirements specified in these GTR, and in appropriate standards. This compliance with be checked by topographic surveying at every design profile and more often when necessary.

Basic properties of the joint sealing compound are: plasticity, resistance to solar radiation, watertightness, resistance to aggressive action of water or other effluents in case this ditch receives water from road surfaces.

The concrete used must comply with the design, with requirements specified for concrete class C 25/30 and with provisions contained in these GTR.

Calculation of work

The ditch excavation quantities will be calculated per cubic meter of excavation taking at that into account the class of soil.

The ditch lining, including preparation of the bedding, will be calculated per square meter of completed ditch lining, measured according to the surface area of the concrete lining.

The unit price comprises ditch excavation in accordance with grades and lines as specified in the design, and the use of special accessories and tools when required, as well as the preparation of the bedding.

Any other work not specified in the requirements, design and these GTR, will not be accepted as an increase in work or as additional work.

4.2.4 DITCH LINED WITH CONCRETE - PREFABRICATED CONSTRUCTION

Description of work

The work covers excavation of ditches in loose or natural soil regardless of soil class, spreading or transport of surplus material to the place of disposal, preparation of bedding for the concrete lining, and construction of concrete lining by means of finished factory made reinforced-concrete elements as specified in the design.

The concrete elements will be inserted in the previously excavated ditch where they will be placed on the 0/5 mm sand bedding or on an another bedding if approved by the Supervising Engineer.

Prior to the preparation of the concrete bedding, the Supervising Engineer will approve the excavation work, after which the bedding for concrete lining may be realized.

Appropriate spacers ensuring respect of the design width of joints between individual lining elements will be placed in space between the placed elements. The joints will be sealed with the joint sealing compound. Basic properties of the joint sealing compound are: plasticity, resistance to solar radiation, watertightness, resistance to aggressive action of water or other effluents in case this ditch receives water from road surfaces. The concrete lining must be realized in accordance with dimensions and lines given in the design, and exposed surfaces of the concrete lining must be even and smooth, particularly in the zone of contact between individual elements.

Quality control

The ditch excavation work must be in conformance with the grades and elevations specified in the design. The dimensions of ditch excavation must comply with dimensions for subsequent lining and, in this respect, no deviation likely to affect the lining will be allowed.

Reinforced-concrete elements must be fabricated in accordance with criteria specified in f these GTR.

The bedding for concrete lining must be leveled and compacted in accordance with the design, relevant standards and these GTR. This compliance with be checked by topographic surveying at every design profile and more often when necessary.

The concrete used for channel lining must be fully compliant with requirements specified in the design. Control tests and audit tests shall be performed in full accordance with relevant provisions as contained in these GTR.

The joint sealing compound must comply with requirements specified in EN.

Calculation of work

The quantity of work for ditch excavation is calculated per cubic meter of actual excavation, in accordance with the class of soil.

The ditch lining, including preparation of the bedding, will be calculated per square meter of completed ditch lining, and measured according to the surface area of the concrete lining.

The unit price for ditch construction includes excavation of ditch and compaction as specified in these GTR.

The unit price comprises ditch excavation in accordance with grades and lines as specified in the design, and the use of special accessories and tools when required.

4.3 ROAD CULVERTS

General

Culverts will be realized in full conformity with drawings and details shown in the design.

Culverts may be:

- pipe culverts, vaulted culvers, box culverts and frame culvers, all fabricated on the site,
- prefabricated pipe culverts and prefabricated frame culverts.

Fabrication of culverts consists of various activities including: excavation with transport of excavated material, leveling, fabrication of all required formwork, scaffolding, supply and installation of steel reinforcement, all concreting, fabrication of waterproofing, assembly of concrete, asbestos cement or metal pipes, fabrication of concrete flumes, stilling pools, inlets, outlets, and all other work as needed for the full completion of culverts in accordance with the design, i.e. as directed by the Supervising Engineer.

4.3.1 Precast Concrete Pipe Culverts

This work consists in the construction and water drainage pipes in accordance with the grades and dimensions shown in the drawings or required by the Supervisors of Works.

Materials for Pipes

The pipes must be in accordance with the requirements of national standards or, if not, those of ASHTO M86 or M200.

Cement, sand and water must comply with the requirements specified above. Unless permitted by the Supervisors of Works, the Contractor must not order or bring pipes for any type of work until a correct list of sizes and lengths have been approved by Supervisors of Works.

The Supervisor of Works reserves the right to inspect and inspect the pipes after delivery for works. Harmful defects detected after acceptance of the pipes and before their installation will become a cause for rejection.

Sand

In order to achieve a solid bed, the sand will be used as granular filling.

The required sand will have a granular curve such as:

10mm 100%
5mm 60-100%
1mm 40-90%
0.3mm 15-50%
0.075mm 2-15%

4.3.2 Construction

➢ Excavation

The ditch should be dug to the depth and degree given by the Supervisors of Works. A bed with a granular filling of 100 mm thickness (sand) will be distributed and compacted as required by the Supervisors of Works in not less than 95% Proctor, normal..

- Layers

The pipe should rest firmly on the bed with the bell above and the extremities fully inserted into the adjacent bells.
The remaining bell opening will be sealed with mortar to prevent water leakage and to ensure the centering of the pipes.

- Cover

After the pipe is installed and controlled by the Supervisors of Works, the sand will be palced to the bed at a level not lower than the radius that forms 30 degrees with the horizontal diameter of the pipe.
Above this level common road construction materials can be used in accordance with the actual depth below the final surface.

- Concrete Casting

Concreting of circular concrete pipes will be done for the lower part of the pipe using simple shapes. For the upper part, special quick release forms will be used. Pneumatic forms can also be used for concreting. When using steel pipes for which the above requirements have also been applied, they must be from a specialized factory with a uniform diameter and thickness in accordance with the Engineer's instructions. They must be treated and the workmanship must be perfect, without cracking in perfect shape at the extremities, to ensure an impenetrable connection from the water. Normally the pipes will be installed in a straight line and at the specified level and on a lean concrete pad and the thickness to be determined by the engineer. They will also be surrounded with concrete mortar according to the required proportions and configuration presented in the project drawings, after a perfect bonding of the joints with cement mortar.

4.3.3 EXCAVATION FOR CULVERT FOUNDATIONS

Description of work

The excavation work for the foundations of culverts will be carried out in accordance with dimensions specified in the design or according to dimensions subsequently defined on the site based on local terrain conditions, but subject to approval of the Supervising Engineer. The excavation work will be mechanical, although manual excavation may be allowed in exceptional cases and in case of small quantities.

This excavation work must be carried out in full accordance with provisions sections of these GTR.

Quality control

The geometrical accuracy of the excavation work must be prescribed in the design. If this information is not provided in the design, tolerances within ± 2 cm from the design lines and levels will be allowed.

The as-built condition will be checked by topographic measurements. The topographic survey supervisor will check topographic measurements and approve as-built documents by his signature. If the required accuracy of excavation work has not been achieved, the topographic work supervisor shall require rectification of the error.

The quality control for concrete components and for fabrication of precast elements will be carried out in accordance with appropriate provisions of these GTR.

The compliance with soil compaction level specified in the design will be checked by testing compressibility modulus using the bearing plate method, or by measuring compaction level through bulk density determination on at least two points, as measured along the length of the excavation bottom, in accordance with EN and ARDM.

Calculation of work

The excavation work will be measured per cubic meter of excavation work actually performed, in accordance with dimensions specified in the design and provisions contained in Section 3 of these GTR, and according to soil excavation classes.

The unit price also covers leveling (preparation) of foundation bottom within tolerances specified in the design. If the required accuracy can not be achieved by mechanical means, the unit price must also provide for manual preparation and leveling of the foundation bottom.

4.3.4 CONSTRUCTION OF CONCRETE CULVERTS

Description of work

In general terms, concrete culverts will be constructed in accordance with provisions contained in these GTR where required activities, such as concrete fabrication and placing, steel reinforcement, scaffold and formwork placing, and waterproofing requirements, are specified.

Quality control

The quality control for the concrete and its components will be carried out in accordance with applicable regulations and standards, and in conformity with these GTR.

Calculation of work

The concrete work will be calculated per cubic meter of concrete placed in accordance with provisions contained in these GTR. The unit price for placed concrete includes supply, placing and cure of concrete, all formwork and scaffolding, and all other work and material needed to complete the work.

The work relating to steel reinforcement will be measured in kilograms (kg) of steel reinforcement placed, depending on the profile. The unit price includes supply, transport, handling, bending and assembly of reinforcing steel as specified in the design.

4.4 ROAD DRAINAGE

General

All rainwater will be evacuated from the road pavement, shoulders and cutting slopes by appropriate surface drainage elements (curbs, gutters and drains with grating) and manholes, and will then be carried into the drainage system. Depending on individual requirements, the road drainage will be built as either close or open drainage system. The treatment of water will depend on individual requirements and water protection measures applicable in the area traversed by the road.

The work must be carried out in accordance with the design, appropriate regulations, Quality Control and Quality Assurance Program, Construction Management Design, Supervising Engineer's requirements, and these GTR.

The drainage system must be realized in accordance with detail drawings presented in the design, and in conformity with these GTR.

Every change of design proposed by the Contractor and approved by the Designer, will have to be additionally approved by the Supervising Engineer prior to its implementation.

Drainage pipes will be placed onto the bottom of the previously excavated ditch, i.e. onto the bedding layer which must be properly leveled, compacted, and prepared in conformity with dimensions and lines specified in the design.

The bedding must be realized in compliance with these GTR.

The compliance of ditch bottom compaction level with design requirements will be checked, prior to installation of individual drainage elements, by determining compressibility modulus according to the bearing plate method, or by measuring compaction level through bulk density testing at the prepared ditch bottom, in accordance with EN and ARDM.

Control measurements aimed at checking compaction level at the bottom of drainage ditches, will be carried out at an appropriate place between every two neighboring manholes.

4.4.1 EXCAVATION OF DRAINAGE DITCHES

Description of work

The work consists of mechanical excavation of drainage ditches in soil classes A, B and C, to be carried out in accordance with dimensions given in the design and based on provisions contained in these GTR.

The width and depth of the ditch will be as specified in the design, and compliant with requirements contained in the European standard EN 1610 1997.

The excavation will be widened by 50 cm or more, as specified in the design, at the point of contact between pipes and manholes. The widenings are necessary for the treatment, jointing and sealing of pipes.

The excavated material will temporarily be deposited along the border of the excavated ditch at a safe distance from it so as to avoid any cave-in. A part of material will be used for ditch backfilling and the remaining material will be transported to the specified place of disposal where it will be spread as appropriate.

The drainage excavation work also includes excavations at the position of manholes and excavations for drains, as well as excavation for possible leveling of foundation soil according to provisions contained in these GTR.

The minimum width of the ditch used for drainage operations will be dependent on the drainage pipe profile specified in the design and on ditch depth requirements, as well as on geotechnical features of the soil

Quality control

Dimensions of all excavations shall comply with levels indicated in the design and shall also be fully compliant with EN 1610-1997. Ditches must be realized in such a way to ensure safe and proper installation of pipes. If not specified in the design, the allowable local deviation of the ditch bottom from the design level shall be no more than 3 cm. At manhole positions, when longitudinal grade of the ditch bottom is less than 1 percent, the deviation from the design level shall not exceed ± 1 cm.

The stability of ditch slope will be ensured, when considered necessary based on physicomechanical properties of soil, by appropriate shoring or by means of an another appropriate method. This shoring shall be removed based on an appropriate structural analysis so as to avoid drainage pipe damage or displacement.

If the natural foundation soil or, in general, any excavation bottom, does not comply with bearing capacity requirements specified in the design, then it must be brought to the specified level of compaction. This will be done either by compaction or by replacement of material, all in accordance with provisions contained in these GTR.

Calculation of work

The work will be measured and calculated per bank cubic meter of excavation made in accordance with the levels specified in the design, making at that distinction between soil classes as defined in these GTR.

The item covers excavation in the specified class of soil, all necessary shoring, water pumping, temporary deposition of excavated material, loading and transport of surplus material to the place of disposal, and cleaning terrain in the ditch zone after completion of drainage work.

The item also includes excavation of widenings at the place of contact between pipes, manholes and drains, and any widening of excavation to enable shoring, all as specified in EN 1610:1997, and in accordance with solutions presented in the design.

The unit price will include any hand leveling (preparation) of the ditch bottom to make it compliant with the design and these GTR.

The item also covers any local repair at the bottom of excavation work, as specified in these GTR.

4.4.2 PREPARATION OF BEDDING FOR DRAINAGE PIPES

General

Once the bearing capacity of soil has been checked and the compaction level proven, then the gravel or concrete bedding will be placed at the bottom of the ditch, in thickness as indicated in the design.
If the natural foundation soil at the bottom of the excavation does not comply with the specified load bearing capacity, then it must be improved. This is achieved by mechanical compaction of soil or by replacement of material in compliance with provisions contained in Sections 3 these GTR.
Poor quality soil at ditch bottom will be improved at longer stretches in accordance with results obtained on a test section.

The test section to be used to select the best possible improvement method will be approximately 30 m in length.

Poor quality soil will be improved in full accordance with provisions contained in Section 3 of these GTR. The method, requirements and details related to the placing of pipe bedding layers is specified in the design and in EN 1610:1997.

The Supervising Engineer may approve a change to design solutions provided that such change is in accordance with the mentioned standard, and that an appropriate approval of the Designer has been obtained.

4.4.3 PREPARATION OF SAND BEDDING

Description of work

Once the excavation bottom has been prepared and approved, the work may proceed by placing a sand bedding layer in accordance with solutions presented in the design.

The sand bedding shall be placed onto a suitably prepared ditch bottom. The thickness of this sand layer will be as specified in the design. The minimum bedding thickness will be 3-5 cm.

The sand bedding will be spread along the entire ditch bottom width, in one or two layers, as specified in the design.

Placing bedding in a single layer. When the bedding is placed in a single layer it has to be prepared in such a way that the pipe sits on the bedding by the circular arch of 90 degrees as measured from the pipe axis.

Placing bedding in two layers. If the bedding is placed in two layers, the lower layer will be 10 cm in thickness when soil conditions are normal, or 15 cm in thickness in case of rock or other hard soil, as specified in EN 1610:1997. This first layer is placed before pipe installation and connecting, while the other sand layer will be placed after the pipe has been laid and connected to manholes or other devices.

Quality control

The sand bedding must be prepared in full accordance with dimensions and requirements specified in the

design. The finished bedding must not present local irregularities, as that would permit local accumulation of water in pipes during the use of the drainage system.

No uncontrolled water flow will be allowed in the ditch, so as to prevent washout of individual fractions of soil material.

The finished bedding has to be approved by the Supervising Engineer prior to the installation of drainage pipes. Deviations in excess of ± 1.0 cm, over the length of 4 m, shall not be tolerated.

The biggest grain in the top and the bottom layer of the bedding must not exceed one third of the bedding thickness, i.e.:

- for the pipe diameter of ≤ 200 mm, the maximum grain size will be 22 mm,
- for the pipe diameter from 200 to 600 mm, the maximum grain size may be 40 mm.

Various supports, riders or other inserts will be installed in the bedding to ensure compliance of drainage pipes with vertical and horizontal lines specified in the design.

The height of installed supports will be controlled, monitored and checked through geodetic measurements. The pipe installation may commence only after the Supervising Engineer has approved the bedding (i.e. its height and compaction level) and after all irregularities and deficiencies have been remedied.

Calculation of work

The work will be measured and calculated per cubic meter of completed bedding layer (top layer and bottom layer) in thickness as specified in the design.

The item comprises supply of material including loading, transport, unloading, spreading and compaction in the ditch to the thickness as specified in the design. The unit price includes preparation of pipe bedding and its shaping in accordance with the solution presented in the design.

The item also covers all accessory tools, materials and work as needed for proper pipe positioning. Any surplus quantities resulting from excavation shall neither be calculated nor paid for.

4.4.4 PREPARATION OF CONCRETE BEDDING

Description of work

The concrete bedding may be placed onto the previously prepared and approved ditch bottom in accordance with solutions and geometry as specified in the design.

The concrete bedding will range from 5 to 15 cm in thickness, depending on the solution presented in the design.

The concrete bedding, when used as support for the drainage pipe, will be placed in either one or two layers.

The first concrete layer will be the leveling layer class C 12/15 (MB 15) 5 cm in thickness, and it must be realized in accordance with provisions of these GTR. This layer will be placed before the pipes are laid.

The second layer will be used as pipe bedding and will be installed after the pipes have been laid. This layer will be of variable thickness, depending on pipe diameter. It will be placed in such a way that the pipe will be covered with up to 1/4 to 1/3 of its circumference or with its portion forming an angle of 90 degrees, measured from the center of pipe profile.

The method, requirements and details for placing the bedding layer for pipes are defined in the design and

in EN 1610:1997.
The Supervising Engineer may approve a change to a design solution provided that such change is in accordance with the mentioned standard, and that an appropriate approval has been obtained from the Designer.
The composition of the concrete mix used as bedding layer must comply to requirements specified in the design and in these GTR.

Quality control

The concrete bedding shall be placed in accordance with measurements and dimensions specified in the design and in these GTR. The concrete must be fully compliant with design requirements and with requirements for the concrete class C 12/15 (MB 15).
Prior to the placing of the concrete bedding, the ditch bottom must be leveled and compacted in accordance with the design and these GTR.

The manufacturing, placing, and compliance checks for concrete, must be carried out in accordance with requirements contained in these GTR.

Calculation of work

The work will be measured and calculated per cubic meter of the class C 12/15 concrete layer placed in accordance with thicknesses and widths as specified in the design. Quantities of placed concrete in excess of those specified in the design shall neither be taken into account nor paid for, if they are due to excavation errors.

The price includes supply, transport, placing and cure of concrete.

4.4.5 INSTALLATION OF DRAINAGE PIPES

General

The following pipe types are used in road drainage activities: concrete pipes, asbestos cement pipes, PVC pipes, seamless steel pipes and, in exceptional cases, cast iron pipes, clay pipes and pipes made of other materials complying with requirements specified in the design, and accompanied with the certificate and approval authorizing their use in the Republic of Albania.
Drainage pipes will be placed on the previously prepared sand or concrete bedding. The pipes may be placed only after the Supervising Engineer has approved the bedding and this through topographic surveying to be made at every design profile or more often if necessary.

Pipes used in road drainage activities are normally of circular cross section, and their dimensions and pipe diameters are set in the design.

Corrugated HDPE pipes DN315;DN500 SN8
HDPE Double wall corrugated pipes have a smooth – surfaced inner wall surrounded by a profiled outer wall (coloured black). The corrugated outer wall provides optimum strength under compressive loading form covering layers and traffic (High Ring Stiffness). The bright yellow colour of the inner pipe also improves visibility in TV inspection, providing optimum, conditions for acceptance testing.
Material and dimensions

Technical specification	Unit	Value	Standard
Density	g/cm3	0.95 – 0.96	ISO1183
Stress at yield Strength	Mpa	22-27	ISO1183
Elastic module	Mpa	>900	ISO527-2/1B/50,TS1398

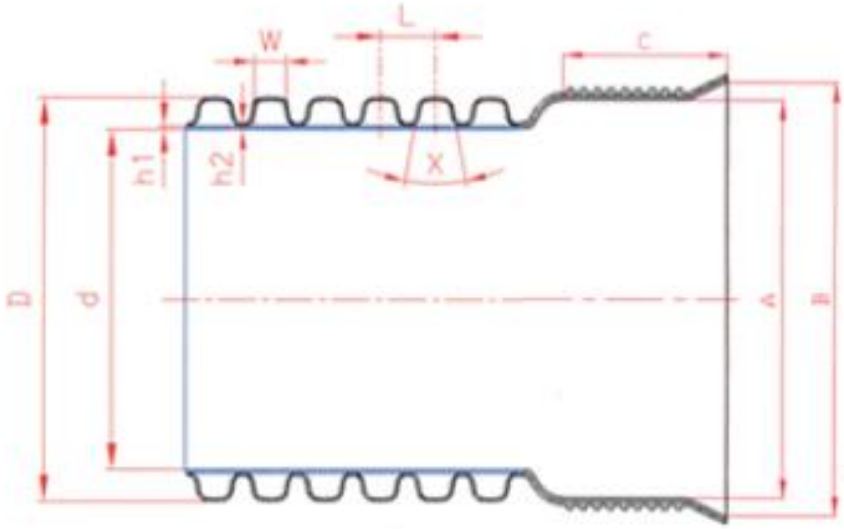

DN	ID	OD	L	h1min	h2min	W	A	B	C
DN300 SN8	294	340	25.4	1.7	2.5	16	344	364	157
DN500 SN8	490	572	50.8	3	4.5	33	579	598	220

Connection

For connection, the pipe end (male) and the inside of the coupler (female) must be cleaned and then the appropriate gasket should be placed on the pipe end and then lubricated with soap or lubricant materials. After thar connect the pipe end and push the pipe into the coupler. Care should be taken to ensure that the rubber gasket does not rotate onto the pipe, as it will not water tight. To ensure proper water tightness, care should be taken to clean the gasket and coupler. In the absence of proper care, the corrugated form of the pipe will pull the trench materials into the coupler.

1. Clean pipe surface
2. Install rubber ring
3. Spread lubricant
4. Connect Pipe
5. Insert pipe

Pipe trench and backfilling

– Final Backfill: Decompressed area of soil (cross-sections are excluded).
– Initial Backfill: All solid materials are removed, decompressed area of soil.
– Bedding Layer: Decompressed area of sand.
– Ho: Distance between the ground to the top of the pipe.
– b: Width of the trench (mm).
– Y: Height of the bedding layer (mm).
– DN: Pipe outside diameter (mm).
– Ho has to be minimum 50 cm.

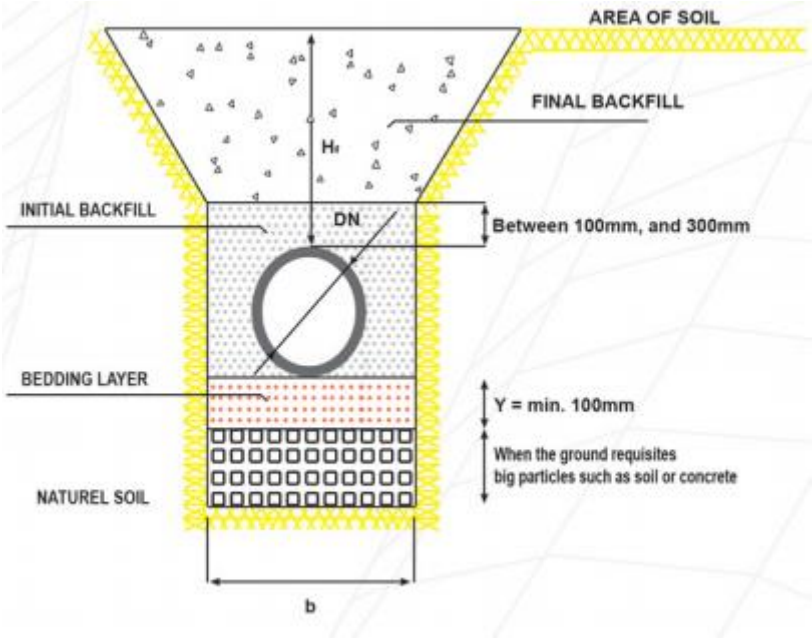

Storage and handling of HDPE Double Wall pipes

The land used for storage should be flat. The ground can be artificial or covered with asphalt, sand or grass. Note that pipes are made of high-density polyethylene, and the presence of sharp stones underneath the pipes will cause a hole or deformation of the pipes at that point. In addition, the deposition of pipes in rugged areas will cause deformation of pipes in different points. It is advisable to put three plastic pallets under the pipes and avoid direct contact between pipes and the ground.

They shall be placed under a canopy to be kept away from direct sunlight. In general, it is best to keep pipes in roofed space to protect them against sunlight, and if kept them in open space, pipes should be covered with anti-UV covers, and it is best to have the pipes vertically in front of the light.

If temperature is more than 25 ° C, pipes will change in size. Therefore, in cases where air temperature is more than 25 ° C or the storage time is longer than 24 hours, there is a need for additional care in the storage and keeping the pipes in better conditions than the maximum allowed standards.

In laying pipes in the trench, it is necessary to transfer them using appropriate equipment into the trench and refrain from throwing pipes into the trench. Make sure the pipe does not fall on the edge when carrying inside the trench, because the weight of the pipe causes deformation at the edge and makes it difficult to connect the pipes.

PVC -U pipe DN250 SN8
PVC-U pipe DN200mm SN8
PVC-U pipe DN100mm SN8
PVC -U pipe DN125 SN8
PVC -U pipe DN110 SN8
PVC-U fittings

Material and dimensions

PVC-U (Polyvinylchloride, unplasticized)
pipes: DIN EN 13476-2, fittings: DIN EN 1401

Nominal diameters DN/OD
110, 125, 200, 250

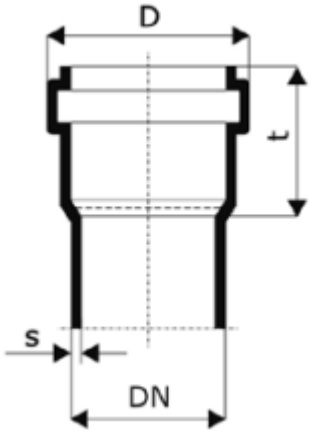

DN/OD	s(mm)	D(mm)	t(mm)
110 SN8	3.2	127	66
200 SN8	5.9	225	106
250 SN8	7.3	287	128

Installation
DIN EN 1610, DIN EN 476, DIN 1986-100
Seal
Factory inlaid SBR lip seal acc. to DIN 681 for pipes and all fittings.

Storage and handling
Pipes should be given adequate support at all times. Pipes should be stacked in layers with sockets placed at alternate ends of the stack and with the sockets protruding.
Horizontal supports of about 75 mm wide should be spaced not more than 1.5 m centre-to-centre beneath the pipes to provide even support.
Vertical side supports should also be provided at intervals of 3 m along rectangular pipe stacks.
For long-term storage (longer than 3 months) the maximum free height should not exceed 1.5 m. The heaviest pipes should be on the bottom.
If it is planned to store pipes in direct sunlight for a period longer than one year, then the pipes should be covered with material such as hessian, placed so as to not restrict the circulation of air in the pipes which has a cooling effect. Coverings such as black plastic must not be used as these can greatly increase the temperatures within the stack.
Pipes should not be stored close to heat sources or hot objects, eg., heaters, boilers steam lines or engine exhaust, or against reflective metal fences which may concentrate heat.
Pipes should not be thrown from trucks or dragged over rough surfaces. Plastic piping becomes more susceptible to damage in very cold weather so extra care should be taken when the temperature is low.
Since the soundness of any pipe joint depends on the condition of the spigot and the socket, special care should be taken not to allow them to come into contact with sharp edges or protruding nails.

Other additional general specifications
The pipes shall be laid in a stoneless sand bed according to manufacture's recommendations. All silt and clay debris 30 cm underneath the foundation of the pipes have to be replaced.
Non-cohesive medium to coarse sand shall be placed on all sides with a minimum height of 100 mm. The grading shall be from 0 – 4 mm. The grading curve shall comply with EN 1610.
Trenches have to be excavated in order to install the pipes in the required depth.
The positions of all pipes shall be surveyed, levelled and marked immediately after placing.
An underground warning tape shall be laid 30 to 50 cm above all pipes.

Reinforced concrete manholes 60x60cm, 1.0x1.0m, 1.5mx1.5m, 2.0x2.0m

The manholes have to be waterproof with the required tightness approval whatever kind of construction form will be chosen.
The concrete shall be C 30/37 with a percentage of reinforcement according to structural calculation.
Manholes shall be founded on a lean concrete base C 12/15 with a minimum 10 cm thickness.
Non-standard manholes shall be equipped with step irons. Steps shall be cast iron, polyethylene coated, at least 15 mm thick, not less than 400 mm in width, and spaced 300 mm on centre.
The height (h) of the manhole depends on the elevation of the incoming/outgoing water gravity flow pipes according to the drawings. The number and position of the incoming/outgoing pipes is also given in the drawings.
The pipes shall be connected watertight to the manholes.
All construction joints to manholes shall be watertight.
The cover of the non-standard manhole shall be at least of an open diameter of 60.0 cm.
The covers shall be ventilated and load class C250 according to EN 124
The frame and grating shall be of cast iron and of C250 load class according to EN 124.
The grating shall be of a “bicycle safe” design.
The grating shall be smoothed at the edges to prevent damages to tires.

Description of work

The pipes will be placed into the ditch by mechanical means, aligned as appropriate and connected, all as specified in the design and in manufacturer's instructions.

Concrete pipes will be connected by joining the tongue of one pipe, previously coated with plaster, with the groove of the other pipe, and by making an external strengthening 3 to 5 cm in thickness and 10 cm in width, using cement mortar in the proportion of 1 to 3.

Vibro-pressed watertight drainage pipes equipped with rubber gaskets shall be transported, laid and connected in accordance with detail drawings and instructions provided by the pipe manufacturer.

Asbestos cement pipes, clay pipes and plastic pipes shall be connected in accordance with detail drawings and instructions provided by the pipe manufacturer, using appropriate fittings and connection accessories.

Pipe to pipe joints and pipe connections to manholes must be watertight. Pipe to pipe joints may be treated with cement mortar, bituminized strip coated with bituminous compound, rubber gaskets, rubber rings, collars and various types of joint-sealing putty.

Quality control

All pipes must be supplied with an original document attesting to their acceptability as specified in Section of these GTR, and their use shall be subject to approval of the Supervising Engineer.

The quality of pipes to be used in drainage applications is specified in appropriate standards mentioned in these GTR and in relevant Albanian standards.

The pipe laying operations and testing of the road drainage system upon completion must be fully compliant with the European standard EN 1610:1997.

Any material not compliant with such quality requirements shall be rejected.

According to EN standards , drainage pipes must meet requirements relating to:

1. dimensions (diameter, length, wall thickness),
2. impermeability,

3. resistance to compression at pipe top,
4. water absorption (at immersion),
5. durability and resistance to aggressive substances: salts and oil derivatives.

Laying of partly damaged or cracked pipes shall not be permitted.

Control tests

According to minimum pipe quality control testing requirements, the testing must be performed at every 2000 m of pipes laid. In water protection areas, such testing must be carried out at every 1000 m.

The control testing program must be submitted to the Supervising Engineer for approval.

If the Supervising Engineer finds during the control tests that the deviation of results is higher than permitted, he may increase the frequency of testing, i.e. the minimum testing requirement.

If it is specified in the design that the drainage system must be watertight, the watertightness of the system will have to be tested on the protected but not backfilled portion of the drainage system tested. The testing must be carried out in accordance with the standard EN 1610.

The watertightness of the pipeline will be tested by applying test pressure ranging form min. 10 kPa to max. 50 kPa at the pipe top during the period of 60 minutes at the test section until the ground level, depending on the pre-defined upstream or downstream shaft. In the scope of the testing, the water will be kept in the pipeline for 24 hours in order to saturate pipe walls (concrete pipes) with water, and then the pressure will be raised to the specified level. The test section will remain under pressure for 60 minutes.

Test requirements:

The pressure must be maintained within 1 kPa of the specified value (50 kPa) at the pipe top. The total volume of water added during the testing to fulfill the above requirement must be measured and recorded, and the pressure must also be measured and recorded at every moment until the required pressure is reached.

The testing requirements have been met when the volume of added water does not exceed:

- 0.15 l/m^2 in 30 minutes for pipelines,
- 0.20 l/m^2 in 30 min for pipelines, including drains,
- 0.40 l/m^2 in 30 min for manholes.

NOTE: m^2 means "wet internal surface".

Unless otherwise specified, the testing of individual joints may be permitted instead of the entire pipeline testing, usually for pipes in excess of 1000 mm in diameter.
One meter long test section must be selected for the testing of individual pipe joints, unless otherwise specified.

Testing requirements are similar to those for 50 kPa pressure testing at pipe top.

An original document with impermeability test results must be submitted to the Supervising Engineer.

It is advisable to test compaction level, with respect to lateral backfilling and main backfilling activities, during the progress of works.

Audit tests

The proportion of audit tests, which are performed by the Employer, to control tests is generally 1 : 3. The points from which samples will be taken for control and audit tests will be determined by the Supervising Engineer based on an appropriate statistical method.

The Supervising Engineer will also define the scope and requirements for topographic measurements to be performed on the finished pipeline. Allowable deviations from the design level will be dependent on the longitudinal grade. The longitudinal grade of pipe sections between manholes must be uniform. The installation of pipe in horizontal grade or with local "upward grade" will not be permitted.

Calculation of work

The work will be measured and calculated per linear meter (ml) of the fully completed drainage pipe. The unit price covers purchase and delivery of pipes (separately for every profile) to the site with unloading next to the drainage ditch, temporary deposition or storage, transport along the route, lowering into the ditch, and laying in accordance with requirements specified in the design and in these GTR.

The unit price includes all work, additional materials and accessories needed for the proper installation and connection of drainage pipes.

The item covers fittings, gaskets, treatment of joints and everything else that is needed for full completion of the pipe installation work, including the watertightness testing.

4.4.6 FIRE FIGHTING ELEMENTS - CAST IRON PIPES

Socked pipes material and dimensions
The pressure pipes with diameter DN 100-200 shall be made of Ductile Iron with push-in joints .
Pressure rating should not be less that the one showed in the drawings for various part of the system
Pressure class in conformity with Standard EN 545-2010 and ISO 2531-2009
External coating consists of two layers:
- a layer of zinc-aluminium 85/15 alloy, enriched with copper, with a minimum surface density of 400g/m², applied by spraying molten metal onto the surface of the iron, using an electric arc spray gun, from ZnAl (Cu) alloy wire
- a protective layer of a water-based blue acrylic of average thickness 80 microns applied using a spray gun
Internal coating: sulfate resisting blast furnace cement mortar
Field of use:
For drinking water networks and other water networks (except sewage water)

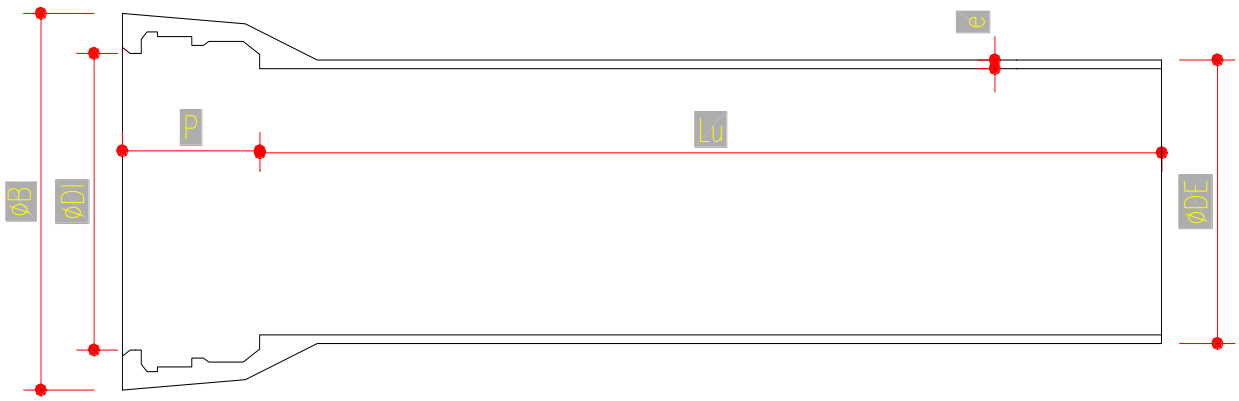

DI pipe DN200 Dimensions
External nominal diameter of the barrel according to EN 545 and ISO 2531, ØDE = 221.6mm
Nominal thickness according to ISO 2531, e = 5.4 mm
Internal nominal diameter of the socket ØDI = 225.2 mm
Nominal depth of the socket P = 106.5 mm
Nominal diameter of the socket ØB= 385.3 mm

DI pipe DN150 Dimensions
External nominal diameter of the barrel according to EN 545 and ISO 2531, ØDE = 169.7 mm
Nominal thickness according to ISO 2531, e = 5.5 mm
Internal nominal diameter of the socket ØDI = 173.4 mm
Nominal depth of the socket P = 100.5 mm
Nominal diameter of the socket ØB= 220.6 mm

DI pipe DN100 Dimensions
External nominal diameter of the barrel according to EN 545 and ISO 2531, ØDE = 117.8
Nominal thickness according to ISO 2531, e = 5.4 mm
Internal nominal diameter of the socket ØDI = 121.4 mm
Nominal depth of the socket P = 94.5 mm
Nominal diameter of the socket ØB = 166.9 mm

Push-in joints
Gasket
The characteristics of the gasket should be:
Elastomer quality : EPDM
Quick and easy installation
Possible axial play
High coefficient security beyond the PFA
High angular deflection possible up to 5°

Installation
1. Carefully clean the inside of the socket, the spigot and the gasket. Keep all parts clean until assembly has been completed.
2. Insert the joint ring before the pipe is laid in the trench.

3. Ensure that the gasket is properly seated in its groove and especially on the inner loop. Always pull the gasket towards the outside to ensure that it is correctly positioned.
4. Mark the insertion depth
   Mark the spigot at a distance of P-J mm. (if there is no original marking, i.e. if the pipe has been cut or a spigot is used from a different range).
5. Lubricate
   The exposed surface of the gasket
   The pipe chamfer and spigot
   Never lubricate the interior of the gasket groove.
   Apply a sufficient amount of lubricant paste with a paintbrush
6. Assemble
   Center and introduce the spigot into the perfectly aligned socket:
   (a) Up to the marked line corresponding to "P-J mm" (if the spigot has been cut)
   (b) Up to the area between the markings
7. Before angular deflection, insert a metal rule into the socket gap and ensure that the depth of penetration is the same around the whole circumference.

When installing pipes at low temperatures, bring gasket up to a temperature of 20°C to ensure maximum flexibility (such as by immersing them in warm water).

Flanged pipes

The pressure pipes with diameter DN 100-200 shall be made of Ductile Iron and flanged joints.
Pressure rating shall be according to the drawings in various parts of the system PN10-PN16
External coating consists of two layers:
- a layer of zinc-aluminium 85/15 alloy, enriched with copper, with a minimum surface density of 400g/m²), applied by spraying molten metal onto the surface of the iron, using an electric arc spray gun, from ZnAl (Cu) alloy wire
- a protective layer of Aquacoat (semi-permeable), a water-based blue acrylic of average thickness 80 microns applied using a spray gun

• Internal lining: cement mortar
• In conformity with EN 545:2010 and ISO 2531:2009

Field of use:
For drinking water networks and other water networks (except sewage water)

Flanged joints

1. CLEAN AND ALIGN THE FLANGES

Check the appearance and cleanliness of the flange and flange gasket
Align the parts to be mounted.
Leave a large enough gap for the flange gasket between the two flanges.
Flange gasket thickness: DN ≤ 300: 10 mm;

2. Center the reinforced gasket according to the figure below (used for DN<300mm, pressure rating up to PN16):

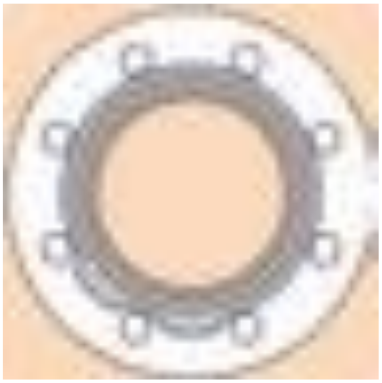

Gasket centering on flanged joints DN<300mm, pressure rating up to PN16

3. Insert the bolts. Tighten the bolts in the order indicated in the diagram opposite and according to the recommended torque values. The bolts are only tightened to compress the reinforced gasket and not exert any tractive force on the pipeline elements.

Ductile Iron fittings
All fittings shall have inside-Outside coating: blue Cataphoresis 70 µm (ECB)
All fittings should be in conformity with EN 545:2010 and ISO 2531:2009

Storage and handling
The contractor is responsible for analyzing and eliminating any risks during installation (especially the use of personal protective equipment).
The storage area for pipes, fittings and accessories must be organized for each type of products and also by diameter.
Do not store products on unstable or sloping ground.
Avoid:
•Marshy ground
•Contaminated ground
•Placing pipes directly on the ground
Support beams, spacers and chocks must be made from construction-grade lumber without any brittle knots.
Storage the gaskets (according to the latest version of ISO 2230)
In particular, avoid:
•Removing gaskets from their bags
•Exposing gaskets to sunlight
•High storage temperatures
To avoid damaging the products:
• Use lifting equipment that is capable of supporting the specified weights.
• Prevent pipes from banging or rubbing against the trailer's sides and pillars.
•Lift and move the pipes gently to prevent any swinging.
•Do not drag pipes across the ground and do not let pipes fall to the ground.
Use hooks that are suited to the load. Hooks must offer a secure attachment and a protective surface* (such

as polyamide).
For handling fittings, use textile slings to avoid damaging the internal lining and the external coating of the fittings.

Additional general specifications
Before executing the work, the Contractor shall submit a detailed description of the pipes and all equipment to be installed to the Client´s engineer for approval.
Contractor shall provide concrete thrust blocking at any point where the layout of the system changes the direction of flow, increases the velocity, or decreases or stops the flow. At these points, the pipes and fittings must be anchored and kept from moving or pulling apart.
Trenches have to be excavated in order to install the pipes in the required depth.
The pipes shall be laid in a stoneless sand bed according to manufacturer's recommendations. All silt and clay debris 30 cm underneath the foundation of the pipes have to be replaced.
Non-cohesive medium to coarse sand shall be placed on all sides with a minimum height of 100 mm. The grading shall be from 0 – 4 mm.
The filling above the pipes shall be done in layers of 0.20 m. After every 0.20 m the layer shall be compacted with compacting equipment less than 100 kg.
The positions of all pipes shall be surveyed, levelled and marked immediately after placing.
An underground warning tape shall be laid 30 to 50 cm above all pipes.

Gate valve DN 150 PN10
Gate valve DN 100 PN16
Gate valve DN 200 PN16
Air release valve DN65 PN10
Check valve DN200 PN16

Gate valve DN 150 PN10

Nominal size DN	Pressure rating PN bar	FLANGES EN 1092-2	TEST PRESSURE ACCORDING TO EN 12266 bar	
			Body	Closed
150	10	10	15	11

Body EN-GJS-400-15
Standard application: water, potable water
Max. working temperature: 60°c
Installation flanges according to EN 1092-2
Face to face: EN 558 SERIES 14
Standard coating: Fusion bonded epoxy powder min. 250 mic RAL 5015
Installation flanges according to EN 1092-2

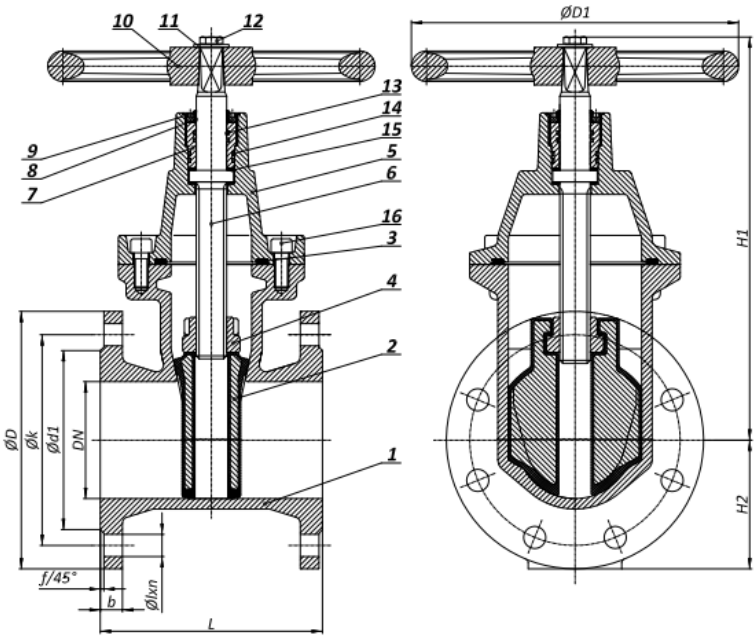

DN	L	H_1	PN10	PN16	PN 10						PN 16						f	D_1	Br. okr. / Otvaranje Umdr. / Hub. Turns / lift	m (kg)
			H_2		D	k	d_1	l	n	b	D	k	d_1	l	n	b				
150	210	460	147,5	147,5	285	240	211	23	8	19	285	240	211	23	8	19	3	320	36	53

Gate valve DN 100 PN16

Nominal size DN	Pressure rating PN bar	FLANGES EN 1092-2	TEST PRESSURE ACCORDING TO EN 12266 bar	
			Body	Closed
100	16	16	24	17.6

Body EN-GJS-400-15
Standard application: water, potable water
Max. working temperature: 60°c
Installation flanges according to EN 1092-2
Face to face: EN 558 SERIES 14
Standard coating: Fusion bonded epoxy powder min. 250 mic RAL 5015
Installation flanges according to EN 1092-2

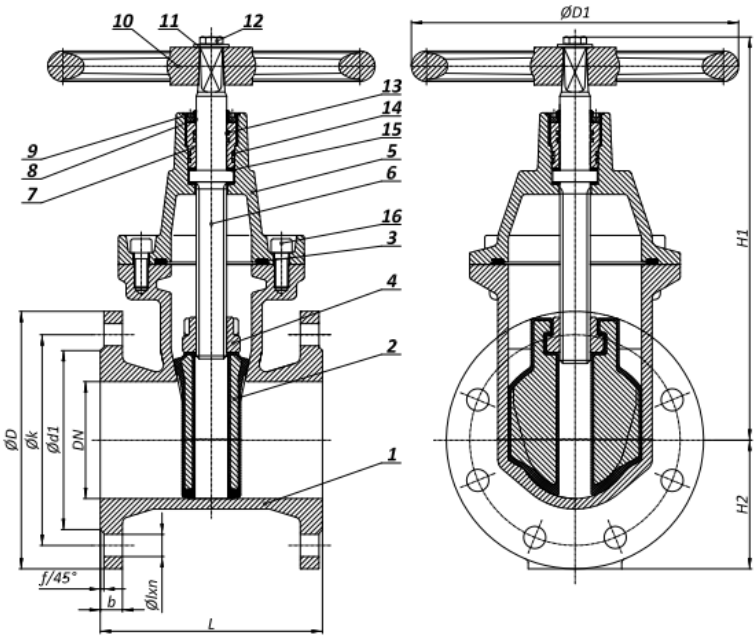

DN	L	H_1	PN10	PN16	PN 10						PN 16						f	D_1	Br. okr. / Otvaranje Umdr. / Hub. Turns / lift	m (kg)
			H_2		D	k	d_1	l	n	b	D	k	d_1	l	n	b				
100	190	330	115	115	220	180	156	19	8	19	220	180	156	19	8	19	3	280	24	32,5

Gate valve DN 200 PN16

Nominal size DN	Pressure rating PN bar	FLANGES EN 1092-2	TEST PRESSURE ACCORDING TO EN 12266 bar	
			Body	Closed
100	16	16	24	17.6

Body EN-GJS-400-15
Standard application: water, potable water
Max. working temperature: 60°c
Installation flanges according to EN 1092-2
Face to face: EN 558 SERIES 14
Standard coating: Fusion bonded epoxy powder min. 250 mic RAL 5015
Installation flanges according to EN 1092-2

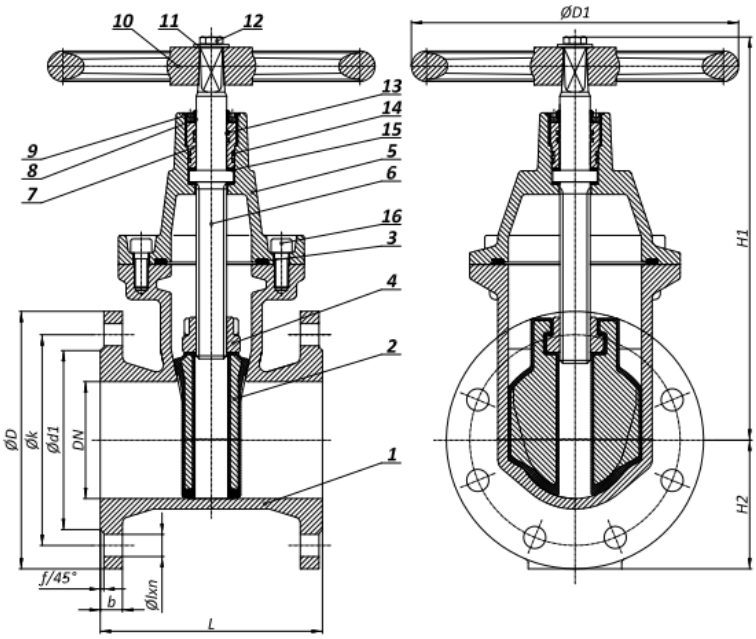

DN	L	H_1	PN10	PN16	PN 10						PN 16						f	D_1	Br. okr. / Otvaranje Umdr. / Hub. Turns / lift	m (kg)
			H_2		D	k	d_1	l	n	b	D	k	d_1	l	n	b				
200	230	550	180	180	340	295	266	23	8	20	340	295	266	23	12	20	3	360	38	83

Air release valve DN65 PN10

Nominal size DN	Pressure rating PN bar	FLANGES EN 1092-2	TEST PRESSURE ACCORDING TO EN 12266 bar	
			Body	Closed
100	16	16	24	17.6

The automatic air inlet-relief valve allows deareation during pipe line operation as well as entrance and exit of air in the course of pipe line filling and emptying, securing thereby an undisturbed pipe line operation. The functioning is self-acting on the principle of ball buoyancy and pressure difference between pipe line interior and atmosphere. The air inlet-relief valve consists of two chambers. The small orifice chamber is assigned for relief of small volumes of air and the big orifice for inlet and relief of large volumes of air. The air inlet-relief valve is located at the highest pipe line bends.
Body EN-GJS-400-15
Standard application: water, potable water
Max. working temperature: 60°c
Installation flanges according to EN 1092-2
Face to face: EN 558 SERIES 14

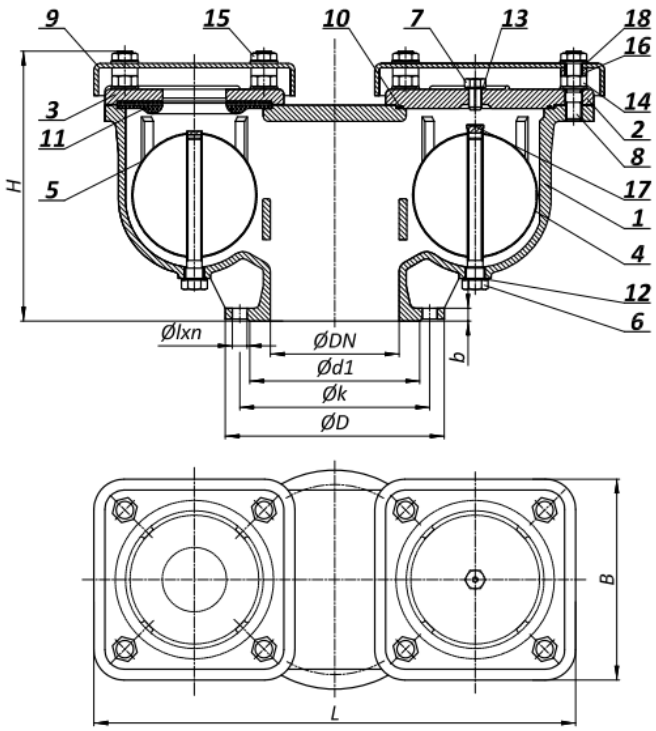

DN	H	L	B	D	k	d1	n	l	b	m (kg)
65	242	404	184	185	145	118	4	19	19	32

Check valve DN200 PN16

Nominal size DN	Pressure rating PN bar	FLANGES EN 1092-2	TEST PRESSURE ACCORDING TO EN 12266 bar	
			Body	Closed
100	16	16	24	17.6

Body EN-GJS-400-15
Standard application: water, potable water
Max. working temperature: 60°c
Installation flanges according to EN 1092-2
Face to face: EN 558 SERIES 48

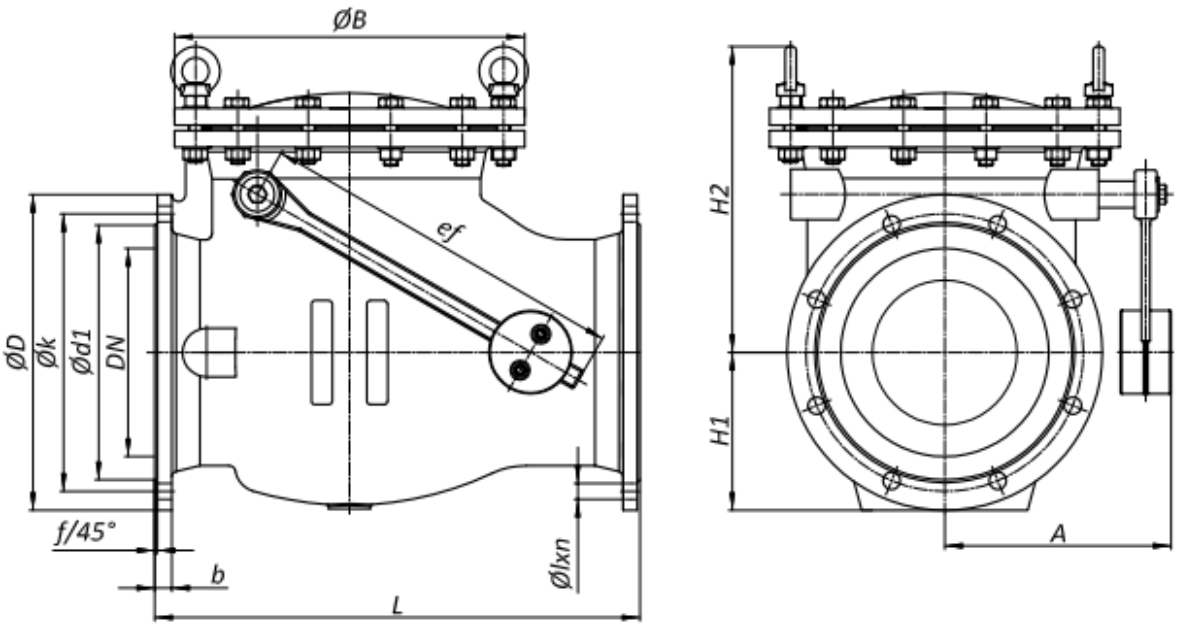

DN	L	H 1		H_2	e_f	A	B	PN 10						PN 16						f	m (kg)
		PN10	PN16					D	k	d_1	l	n	b	D	k	d1	l	n	b		
200	500	180	180	367	343	265	395	340	295	266	23	8	20	340	295	266	23	12	20	3	125

All valves shall be joined to avoid intrusion of silt, grit, grout, concrete, sand or water.
Before executing the work, Contractor shall submit a detailed description of the valves, hydrants and fittings and all equipment to be installed to the Client´s Engineer for approval.
All other necessary fittings and equipment shall be regarded by Contractor, approved by Engineer and shall be included in Contractor´s pricing.

4.4.7 MANHOLES

General

The work covers realization of manholes either made of monolithic factory-made concrete with on-site concreting, or of prefabricated elements assembled together at the final manhole position. In road construction, manholes are normally realized as:

- monolithic, concreted on the site,
- prefabricated, made of precast concrete elements,
- semi-prefabricated, made of factory-finished elements, such as asbestos cement or plastic pipes.

Manholes are positioned at points indicated in the design, and placed into the previously prepared excavation. The natural or backfilled soil below manholes must be compacted to the compressibility modulus of Ms ≥ 30 MN/m^2 as measured by the bearing plate 300 mm in diameter, or to the compaction level of Sz ≤ 95% of Standard Proctor density.

The compliance of the underlying-soil compaction level with the value specified in the design must be checked, in the scope of control testing, under the bottom of each manhole.

Typical step irons made of cast iron or corrosion-resistant steel will be placed in manholes exceeding one meter in height, where they will be spaced at 35-40 cm intervals or as indicated in the design.

The item includes realization of the invert in accordance with the design, cure of concrete, removal of formwork, and clearing the site from waste materials prior to the start of ditch backfilling operations.

4.4.8 MONOLITHIC MANHOLES

Description of work

Monolithic manholes of circular or rectangular cross section will be made of concrete class C 25/30 (water/cement ratio of less than 0.45). Manholes will be placed into the previously prepared excavation, i.e. onto the prepared bottom without bedding or onto the sand or concrete bedding.

The thickness of the manhole bottom and walls will be as specified in the design and the single-sided or two-sided formwork will be used for concreting work.

The minimum opening and the manhole cross section must be 600 x 600 mm. Clear span dimensions of the manhole are specified in the design and depend on the diameter of the pipe to which it is connected.

The work includes realization of the manhole invert in accordance with details presented in the design. The fill will be made of concrete class C 12/15 (MB15) in accordance with the requirements contained in these GTR.

Semi-pipes of diameter corresponding to that of the connection pipe (inlet pipe) will be used as formwork for the invert.

Quality control

Manholes will be realized in accordance with dimensions and levels of connections as specified in the design, and will be made of concrete class C 25/30. The manufacturing quality control and the control and determination of compliance must be performed in accordance with requirements contained in these GTR (water/cement ratio of less than 0.45). The resistance to freezing and resistance to deicing salt will be tested

in 50 cycles as per. The manufacturing and placing of concrete must be compliant with EN 206, EN 12370 and with provisions given in of these GTR.

The bottom of excavation in which manhole will be placed must be compacted to the compressibility modulus of $M_s \geq 30$ MN/m^2 as measured by the bearing plate 300 mm in diameter, or to the compaction level of $S_z \geq 95\%$ of Standard Proctor density.

The accuracy of the work will be monitored and checked by topographic measurements, both for the pipe bedding and for the vertical alignment of the drainage pipe after placing. Surfaces of the placed concrete must be even and smooth, without pockets and cracks.

The Contractor may commence with manhole construction only after the bedding layer has been approved by the Supervising Engineer.

All works must be carried out in such a way to ensure watertightness of manhole and its connections, as indicated in the design. The manhole must be realized in such a way to ensure good adherence of the cast-iron cover to the support prepared in accordance with the design.

Calculation of work

The works will be measured and calculated by unit of placed and accepted manhole complying with dimensions specified in the design.

The unit price includes preparation of the surface, purchase, supply (transport), placing, cure of factory-made concrete, realization of the invert, installation of step irons, realization of the cover support or frame, formwork stripping, and site clearing from debris generated during manhole realization activities.

4.4.9 PRECAST CONCRETE MANHOLES

Description of work

Manholes will be made of precast concrete factory-made elements of circular or rectangular cross section, and the concrete class C 25/30 will be used (water/cement ratio of less than 0.45).

They will be placed onto the previously prepared concrete bedding in accordance with the recommendation, requirement or request of the manhole manufacturer, and as specified in these GTR.
The connection of pipes made of concrete and other materials will be realized by means of appropriate fittings and according to details provided by the manufacturer.

The work covers preparation of foundations and connections according to details given in the manufacturer's instructions. The invert will be made, unless specified by the manufacturer, of concrete C 12/15 (MB 15) compliant with requirements contained in these GTR. The invert shall finally be treated with a cement mortar finish.

Quality control

The quality of the concrete will be checked by taking samples from the finished and placed elements of the precast manhole, in accordance with these GTR.

Prior to installation of cast-iron covers, the Contractor will be required to submit an original document attesting to the acceptability of such covers.

The concrete class C 12/15, complying with requirements contained in of these GTR, will be used for manhole foundations and invert.

Calculation of work

The work will be measured and calculated by unit of properly installed and accepted manhole. The item covers compaction and preparation of the bedding, realization of the bedding (foundations) in accordance with manufacturer's instructions, and preparation of connections as specified in the design.

The unit price includes purchase and supply of all integral parts of the manhole, installation of these parts in accordance with the diagram presented by the Designer or Manufacturer, and the treatment of joints.

The price for the installation of manholes made of precast elements includes realization of the invert, installation of step irons, realization of the cover support or frame, removal of formwork and clearing the area from waste generated during realization of the manhole.

4.4.10 INSTALLATION OF MANHOLE COVERS

Description of work

The work covers supply (and storage if needed) and installation of cast iron covers, of the size, weight and bearing capacity as specified in the design. The purchase and installation of the cover shall mean the purchase and installation of the frame and the cover of the bearing capacity and size as specified in the design.
The cover will be installed onto the previously prepared manhole frame or slab, in accordance with the details shown in the design. The cover must fit well along its entire periphery, and any "swaying" of the cover because of the nonsymmetrical pressure due to inaccurate construction, will not be allowed.

Quality control

The accuracy of the work will be monitored and checked by topographic measurements of the height of the installed cover and, in that respect, any deviation in excess of ± 1 cm from dimensions and levels specified in the design will have to be rectified. If the cover is in the pavement, then the ± 5 mm tolerance will be allowed for the final course. The Contractor or the cover manufacturer will have to submit to the Supervising Engineer an original document attesting to the acceptability of the cover and this prior to the installation of the frame and its cover.

Calculation of work

The work will be measured and calculated per unit of the frame and cover installed in accordance with dimensions shown in the design.

The item includes supply and placing of the frame onto the prepared bedding and installation of the cover of bearing capacity as indicated in the design. The unit price includes fabrication of the reinforced-concrete frame to be used as manhole cover support.

4.4.11 DRAINS (WATER INLETS)

General

The work covers realization of drains using monolithic factory-produced concrete with concreting at the drain position, or realization of drains made of factory prepared elements consisting of various building materials which are assembled together into a functional entity at the location of the drain.

In road construction, the drains are most often realized as:

a) concrete monolithic drains, prepared on the site,

b) precast factory made concrete elements,

c) precast factory made asbestos cement elements.

The drains of specified dimensions will be installed at locations defined in the design, by placing them into an appropriate excavation of specified depth and compaction level. The excavation work for the drain will be carried out and calculated in accordance with GTR.

The bottom of excavation for the drain must be fully compliant with requirements and provisions contained in these GTR.

Drains are realized with one-sided or two sided formwork or without formwork, in which case the concrete or asbestos cement pipe is used as an internal formwork. Drains are generally of circular cross section 50 cm in diameter, and the settling tank depth usually varies from 100 to 150 cm.

4.4.12 DRAINAGE DITCH BACKFILLING

Description of work

The drainage ditch backfilling may not commence before the Contractor has furnished the evidence attesting to the acceptability of materials and elements, and the watertightness certificate issued by the competent authority, and before the placed drainage pipes have been accepted by the Supervising Engineer.

The ditch will be backfilled using material from ditch excavation if properties of such material are compliant with requirements contained in these GTR.

If the material does not comply with these requirements, the Contractor will have to propose an another material for backfilling. Any such material will be subject to approval of the Supervising Engineer.

A portion of the ditch around pipes - up to 30 cm above the pipe - will be backfilled with a suitable earth or sand material with the maximum grain size of no more than 8 mm. The rest of the ditch may be backfilled with a coarser material.

The material will be compacted with care, either manually or with lightweight compacting devices, so as to avoid any damage to drainage pipes.

During compaction, the thickness of individual layers will have to correspond to the type of material and compaction equipment used, so that the required compaction level can be obtained along the entire depth of the ditch.

Quality control

The required compaction level will depend on the position of the drainage pipe. If drainage pipes are installed in the roadbed, then the requirements specified in these GTR will be applied.

If drainage pipes are installed outside of the roadbed, the required compaction level Sz shall be at least 95 percent of the Standard Proctor density.

More powerful compaction equipment shall be used for the portion of the backfill situated more that 70 cm above the top edge of the pipe.

Compliance with compaction requirements will be checked by determining compaction level (Sz) with

respect to the Standard Proctor density. The compaction level will be checked for every backfilled layer, on every 50 m of pipeline and, at that, requirements similar to those for embankment construction, as presented in these GTR, will be used.

The compaction level specified in the design for backfill material in the ditch above the pipeline will be measured and confirmed by testing compressibility modulus using the bearing plate method, or by measuring compaction level through bulk density determination for compacted soil between two neighboring manholes.

Calculation of work

The work will be calculated per cubic meter of material placed in the ditch, from which the volume occupied by the drainage pipe will be deducted.

Separate calculation will be made for:

- backfilling with fine-grained material up to 30 cm above the top of the pipe, in m^3,
- backfilling with coarser material (> 30 cm) above the pipe top to the top of the ditch, i.e. to the terrain line with topsoil stripped or to the natural ground level, in m^3.

The work will be calculated based on dimensions given in the design, in accordance with these GTR, and according to instructions given by the Supervising Engineer. The payment will be made based on unit price which includes all material, transport and backfilling work, as well as everything else that is needed for the full completion of the work.

4.4.13 CURBS

General

Curbs are installed at external sides of traffic lanes or pavement in order to provide a visual guidance for the traffic and to enable controlled drainage of water from the pavement. Curbs of various sizes and shapes are used. Concrete curbs are in most cases factory produced elements measuring 100 or 80 cm in length.

Description of work

Curbs are made in accordance with the details and dimensions given in the design. Standard curbs are normally 1.00 m long with the cross section measuring 18/24 cm. Depending on the design, other dimensions may also be used. Curbs are installed onto the concrete bedding as shown on the details presented in the drawing.

Quality control

Curbs must be provided with the document attesting to their acceptability. The original of this document shall be submitted to the Supervising Engineer. Curbs shall be laid onto the bedding made of concrete class C 16./20, in accordance with the corresponding detail given in the design. The quality of the finished and properly placed curb must comply with provisions contained in these GTR.

Curbs shall be made of concrete class C 30/37 - w/c ratio below 0.45, resistant to freezing and deicing salt after 50 cycles according to EN- and the manufacturing and design shall be in accordance with conditions specified in EN 206, EN 12370 and in these GTR.
The placed curb must not be cracked or otherwise damaged in any way.

Calculation of work

The work will be measured per linear meter (ml) of placed curb based on details given in the design, and will also include preparation of the bedding.

The item includes supply, temporary storage and installation of curbs as well as all additional work and material as needed for the full completion of the work.

4.4.14 GUTTERS

General

The work covers construction of gutters of appropriate type, in accordance with dimensions and on road sections as shown in the design, all as specified in these GTR.

The gutters may be made of:

1. concrete (monolithic or prefabricated),
2. stone.

Gutters may be either 0.50 or 0.75 m in width, depending on the intensity of rainfall, as specified in the road drainage design. Gutters must be completed before the start of work on pavement layers the joint thickness of which is less that the thickness (height) of the body (bottom) of the gutter.

The cross slope at the gutter bottom will range from 10 to 15 percent, and the gutter must comply with other dimensions given in the design.

4.4.15 CONSTRUCTION OF CONCRETE GUTTERS

Description of work

Concrete gutters will be installed, in accordance with details shown in the design, onto the granular stone bedding or onto the bedding made of cement stabilized stone material.
Concrete gutters are usually made of two types of factory produced elements, i.e. curbs and a gutter bottom slab, which are placed in keeping with the specified grade (cross slope).

The gutter bottom is made of monolithic factory-produced concrete with dimensions and class according to the design, or of factory-produced elements of specified dimensions, as appropriate for the construction of gutter bottom.

Monolithic gutters are made in sections as specified in the design, but usually ranging from 3 to 5 m in length. In case of 3.0 m sections, expansion joints are made using appropriate inserts which remain in the joints until the concreting ends, after which they are either cut or otherwise removed immediately next to the surface of the gutter bottom.

Concrete gutters may also be installed by mechanical means in full profile, using special on-site gutter fabricating machines. In such a case, the Contractor will be required to prove on a test section, prior to such fabrication, that an appropriate quality of concrete can be obtained and that the geometry of installed elements will comply with relevant accuracy requirements.

Quality control

The evenness and geometrical elements of the bedding for the gutters must be compliant with the design. The compaction level of the bedding must comply with the modulus of compressibility of Ms ≥ 80 MN/m^2,

as measured with the bearing plate 30 cm in diameter, and must additionally comply with requirements of these GTR.

The compaction level will be tested by the Contractor in the scope of control tests at every 100 m, and also by the Employer in the scope of audit tests at every 200 m. The concrete used for gutter fabrication must be concrete class C 30/37 (w/c ratio below 0.45), resistant to freezing and deicing salt, as tested in 50 cycles according to EN, while the fabrication and installation shall be compliant with standards EN 206, EN 12370 and these GTR.

In case of monolithic construction of gutter bottom, in sections of more than 3 m in length, the expansion joints will be 10 mm in width, with inserts that will be removed from the joint after concrete hardening. In this event, the joints will be sealed with the sealing compound. Joints must be compliant with requirements specified in EN. The joint sealing compound will be placed no more than 3-4 cm in depth, while the remaining depth of the joint will be filled with natural or crushed sand, up to 5 mm in grain size.

If gutters are made using a formwork, this formwork will have to properly and evenly fixed and should be resistant to warping. The concrete will be vibrated during placing. The concrete surface will have to be treated as appropriate.
The evenness of gutter surface will be measured with straightedge 4.0 m in length and the maximum allowable deviation from straight line will be ± 5 mm.

Factory prepared gutter elements must be made of concrete class C 30/37. They must be furnished with an evidence attesting to their acceptability, the original of which shall be submitted to the Supervising Engineer. The longitudinal grade shall be no less than 0.2 percent but, exceptionally, 0.1 percent may be accepted on very short sections. The water may be transported in gutter in the length of no more than 100 meters (without drain).

Calculation of work

The work will be measured and calculated per linear meter (ml) of fully completed gutters made in accordance with details shown in the design.

The item also includes preparation of the bedding, its compaction to the required level, supply of concrete, and gutter concreting in keeping with specified cross slope and longitudinal grade values.

If the gutter is to be made of factory-produced elements, the item includes supply, temporary storage and installation of completed gutter elements, as well as all additional work and material as needed for the full completion of the concrete gutter.

4.4.16 CONSTRUCTION OF GUTTER OR CURB OUTLETS

Description of work

The work includes construction of gutter or curb outlets at places indicated in the design, construction of trapezoidal channels in the embankment or at intersection of two embankments, and realization of water outlet structures for discharge into the terrain or into an appropriate body of water.

All portions of the outlet will be made in accordance with the details and dimensions given in the design. Water outlets will be spaced at 40 to 50 meter intervals. In zones with vertical grade curve, outlets may be spaced at up to 20 m intervals. The channels will be prefabricated in accordance with dimensions specified in the design.

Channels will be laid onto a sand layer 5 to 10 cm in thickness, and the sand 0/5 mm in grain size will be used. The trapezoidal channel inlet and outlet structures will be built on site as monolithical structures using

concrete class C 30/37, all in accordance with details given in the design. Concrete sill, to be used as fastening for channels and outlet structures, will be realized at the foot of the embankment.

Quality control

Gutter outlets will be made of concrete class C 30/37 resistant to freezing and thawing, and to deicing-salt action, when tested in 50 cycles according to EN 206; EN 12370 and these GTR.

The quality control of concrete channels will be carried out in the scope of control tests for concrete channels at every 500 m, while the corresponding audit tests will be made at every 1000 m.

Outlets will be built at points specified in the design.

The Contractor will be required to submit to the Supervising Engineer original documents attesting to the acceptability of channels and other materials to be used during realization of outlets.

Calculation of work

The work will be measured:

d) per unit (U) of the fully completed gutter or curb outlet, as shown in details given in the design,
e) per linear meter (ml) of channel placed.

The item includes realization of gutter or curb outlets with the structure for connection with channels, installation of channels at embankment slope and realization of rainwater outlet for discharge into the terrain or into an appropriate body of water.

The unit price includes supply and, if needed, storage and placing of sand for the bedding, installation of concrete channels, purchase and delivery of concrete for the realization of the inlet structure and outlet structure for discharge into the terrain or into an appropriate body of water, placing the bedding made of sand and concrete, and everything else in accordance with the design.

The unit price includes all work, material, accessories and transport, as needed for the full completion of curb or gutter outlets.

4.5 SEPARATORS AND OVERFLOW SPILLWAYS

General
According to their function and use, separators may be defined as devices that enable entry and evacuation of rainwater while being able to retain at least 15 m^3 of effluent coming from the pavement.

These devices are in most cases positioned at lowest levels of terrain along the road route, in depressions along the route, or in the zone in which the route passes from the cutting into embankment.

In addition, separators must be positioned so as to allow access of maintenance and servicing vehicles, and this either directly from the road or via another approach road which is linked to the public transport network.

Various works such as earthwork, steel reinforcement work, concrete work, masonry work, steel and metal work, etc., must be carried out to enable full completion of such structures. These structures/devices are designed and dimensioned in such a way that they are able to receive and temporarily retain harmful effluents.

4.5.1 CONCRETE WORK

Concrete bedding

Description of work

After inspection and submittal of evidence relating to the compaction level and bearing capacity of the soil, the bedding made of concrete class C 12/15 will be placed onto the excavation bottom in thickness as specified in the design.

The thickness of the bedding layer will vary from 5 to 15 cm, depending on the solution presented in the design.

The method, conditions and details relating to the placing of the bedding layer shall be defined in the design. Any changes with respect to the design solution shall be subject to the approval of the Supervising Engineer and the Designer.

One side of the formwork shall be properly wetted prior to concrete placing. The steel reinforcement shall be laid after construction of the bedding layer.

Quality control

The concrete bedding will be placed in accordance with levels and other requirements given in the design. The concrete must be fully compliant with design requirements for concrete class C 12/15.

Calculation of work

The work will be measured and calculated per cubic meter of concrete layer placed in thickness and width as specified in the design and according to requirements for concrete class C 12/15 (MB 15). The price of work includes supply and placing of concrete onto the properly prepared excavation bottom (subgrade).

The unit price for this item also includes evacuation of water, erection of formwork as required, all additional material, accessories and work needed for placing the concrete bedding.

Separator bottom concreting

Description of work

The work covers supply and placing of fresh concrete within limits defined by the formwork and includes laying and fastening the steel reinforcement, as well as the vibration and cure of concrete after placing.

The formwork for the foundation slab of the separator shall be erected in accordance with dimensions and bottom grade as indicated in the design.

Quality control

Surfaces of the concrete must be level and smooth, without any pockets and cracks. Wall levels and dimensions will be thoroughly checked. The quality of concrete and sampling procedure will be inspected in accordance with these GTR.

Calculation of work

The work will be measured per cubic meter of concrete in accordance with the design or according to modifications approved by the Supervising Engineer. The payment will be made according to contract unit prices which include the cost of material and construction, formwork, transport, and everything else that is needed for the full completion of the work.

Concreting external walls and partition walls

Description of work

The work covers supply and placing of fresh concrete within limits defined by the formwork and includes laying and fastening the steel reinforcement, as well as the vibration of concrete with internal vibrator and its cure after placing.

External and internal walls will be concreted using appropriate formwork and the concrete class C 30/37 to which appropriate additives have been added to enhance watertightness. The quality and placing requirements for these additives must be in accordance with provisions contained in these GTR.

The works must comply with indications given in the design or, if changes are necessary, with instructions of the Supervising Engineer, following approval of the Designer.

The preliminary work includes topographic survey of the placed formwork and inspection by the Supervising Engineer of the placed steel reinforcement, which is followed by formwork stripping, placing waterproofing on external walls, and by applying protective coating on internal walls.

Quality control

Surfaces of the concrete must be level and smooth, without segregation, pockets or cracks. Wall levels and dimensions will be thoroughly checked. The quality of concrete and sampling procedure will be inspected in accordance with these GTR.

Calculation of work

The work will be measured per cubic meter of concrete in accordance with the design or according to modifications approved by the Supervising Engineer. The payment will be made according to contract unit prices which include the cost of material and construction, formwork, transport, and everything else that is needed for the full completion of the work.

Concreting cover slabs

Description of work

The work covers supply and placing of fresh concrete, installation of formwork and scaffolding, steel reinforcement placing and fastening, vibration of concrete by internal vibrator, and cure of concrete after placing. Openings complying with the design must be provided for in the cover slab. Frames for steel shaft covers will be installed in these openings.

The concrete work for the cover slab will be carried out using appropriate formwork and concrete class C 30/37, unless otherwise specified in the design, and the concrete must comply with quality requirements as defined in these GTR.

The works must comply with indications given in the design or, if changes are necessary, with instructions of the Supervising Engineer, following approval of the Designer.

Quality control

The quality control and sampling for the placed concrete will be carried out in full compliance with provisions contained in these GTR.

Surfaces of the concrete must be level and smooth, without segregation, pockets or cracks. Levels and dimensions of the cover slab will be thoroughly checked.

Calculation of work

The works will be measured per cubic meter of concrete as indicated in the design or based on modifications approved by the Supervising Engineer. The payment will be made according to contract unit prices which include supply and placing of concrete and reinforcement, erection of scaffold and formwork, transport, formwork stripping and disassembly of scaffold, restoration of site after the work, and everything else that is needed for the full completion of the work.

Concreting manholes

Description of work

The work covers supply and placing of fresh concrete, installation of formwork, steel reinforcement placing, fastening, and vibration of concrete by internal vibrator, and cure of concrete after placing.

The concrete work for the manholes will be carried out using appropriate formwork and concrete class C 25/30 , unless otherwise specified in the design, and the concrete must comply with quality requirements as defined in these GTR.

Quality control

The quality control and sampling for the placed concrete will be carried out in full compliance with provisions contained sections of these GTR.

Surfaces of the concrete must be level and smooth, without segregation, pockets or cracks. Levels and dimensions of manholes will be thoroughly checked.

Calculation of work

The works will be measured per cubic meter of concrete as indicated in the design or based on modifications approved by the Supervising Engineer. The payment will be made according to contract unit prices which include supply and placing of concrete and reinforcement, erection of scaffold and formwork, transport, formwork stripping and disassembly of scaffold, cleaning, and everything else that is needed for the full completion of the work.

Cement finish

Description of work, materials and construction

The work covers application of cement finish layer 2-3 cm in thickness, consisting of cement mortar mix in the proportion ranging from 1:2 to 1:3 (cement : sand). The cement finish will have to be protected against rapid drying and, in this respect, it must be wetted with water during summer for at least three days, or protected by other means in order to prevent evaporation.

Quality control

The work shall be carried out and the quality shall be checked and audited in accordance with these GTR.

Calculation of work

The work will be measured per square meter of cement finish placed on concrete in accordance with the design or according to modifications approved by the Supervising Engineer. The payment will be made according to contract unit prices which include the cost of materials and fabrication, transport, and everything else that is needed for the full completion of work.

Internal waterproofing

Description of work

The work covers application of a waterproofing coat on internal surfaces of concrete. The required watertightness of concrete and its resistance to salt, acids and other aggressive substances, i.e. qualities to be gained by application of internal waterproofing, shall be defined in the design. Before supplying the waterproofing substance, the Contractor shall present to the Supervising Engineer an original document attesting to the acceptability of the substance the Contractor proposes to use, and the proposed waterproofing agent will be supplied and placed only after the corresponding approval has been obtained from the Supervising Engineer.

The waterproofing will be applied in accordance with manufacturer's instructions, i.e.
either with brush, by spraying under pressure, or in an another acceptable manner.

Quality control

The quality of the placed waterproofing will be checked in full accordance with provisions contained in these GTR. The waterproofing coat must be smooth and even, i.e. it must be uniformly applied over the entire surface.

Calculation of work

The work will be measured per square meter of waterproofing placed in accordance with the design or according to modifications approved by the Supervising Engineer. The payment will be made according to contract unit prices which include the cost of materials and fabrication, transport, and everything else that is needed for the full completion of work.

Waterproofing for external concrete surfaces

Description of work

The work covers application of waterproofing for protection of all concrete surfaces that are in contact with earth. This waterproofing consists of two hot coats and a single-layered bituminized felt paper, unless otherwise specified in the design.

After application, the waterproofing must be protected against mechanical damage either by expanded polystyrene, geotextile, or in an another manner as specified in the design or as directed by the Supervising Engineer. The work covers all activities from the supply of waterproofing to its application, and includes protection of waterproofing after application.

The first hot bitumen coating shall be applied onto the hardened and properly dried concrete surface, and this surface shall then covered with a single-layered bituminized felt paper 4 mm in thickness.

The second coat of bitumen shall be applied after the bitumen has dried and hardened.
This activity has to be carried out in dry weather at temperatures higher than 10°C.

Quality control

Bitumen properties and quality testing procedures are specified in applicable EN. Instructions for the application and cure will be defined by the manufacturer. Surfaces onto which the bitumen will be applied must be even, dry and clean. The thickness of the coat, which has to be 2-3 mm, shall be checked during realization of this work.

The quality of the bituminized felt paper shall be in accordance with EN applicable for this type of materials, as indicated in these GTR.

The waterproofing will be carried out in accordance with the design, and must be completed during realization of the work.

Calculation of work

The work will be measured per square meter of area covered with waterproofing. The unit price covers purchase and delivery of all required materials, all accessory materials needed for the preparation and application of the waterproofing, preparation of the area and waterproofing, as well as the application and protection of the waterproofing.

4.5.2 FORMWORK AND SCAFFOLDING

Description of work

All formworks (vertical, horizontal, etc.) shall be fabricated in accordance with requirements and dimensions given in the design. Formwork elements will be cut out and prepared outside of the location in which formwork will be assembled. In order to obtain a smooth face of concrete, i.e. an optimum smoothness of internal walls of the separator, joints between individual formwork elements must be as small as possible and must be sealed with putty or similar material insoluble in water, which will not negatively affect the fresh concrete setting process, nor leave traces of color on the concrete face.

The formwork must be firm, stable and resistant to deformation during the concreting process. Load bearing structural elements of the formwork must be properly dimensioned in design documents, and must be realized in full accordance with the design. If the formwork absorbs water, it should be properly wetted before the concreting begins.

The formwork will be stripped after the concrete has hardened to the level specified in the design, or when approved by the Supervising Engineer. During the formwork stripping, all portions of the formwork will have to be removed, and all wires and formwork tightening screws protruding from concrete surface will have to be cut.

Scaffolds will have to be designed and dimensioned in an appropriate manner, and the corresponding report shall be submitted to the Supervising Engineer for approval.
In case of complex scaffolds, the structural analysis of the scaffold will have to be approved by the certified auditor.

The type and quality of scaffolding materials, the type and quality of steel elements, the scaffold support method and the links between elements of the scaffold, must all be compliant with the structural analysis and scaffold design, and must be harmonized with applicable regulations and standards for wooden or steel structures, as applicable. Requirements contained in these GTR must also be met.

Quality control

The accuracy of the formwork and scaffold installation will be checked by topographic materials and works must comply with requirements contained in these GTR.

The maximum tolerance with respect to values specified in the design shall be ± 5 mm.

Calculation of work

This work is normally not calculated as a separate item. It is usually included in the unit price for cubic meter of completed concrete, except as otherwise specified in the contract.

4.5.3 STEEL BENDING WORK

Description of work

The steel bending work covers supply of reinforcing bars according to the reinforcing steel list in which quantities and types of reinforcing bars are specified. The work related to this item includes cleaning, straightening, cutting and bending of reinforcing bars in accordance with the drawings, as well as placing of reinforcing bars.

The steel bending work will be performed either on site or in separate workshops from where the reinforcement will be supplied in form of properly bent bars or as adequately formed steel fabric to the site, where it will be installed at locations specified in the design. The preparation of reinforcing bars will have to be harmonized with the works coming before installation of reinforcement, in order to prevent any unnecessary interruption of work. This in other words means that the reinforcement will have to be fully prepared and on site prior to the completion of excavation work for the foundation pit (for foundations), prior to concreting of foundations (for piers and abutment wings), and prior to installation of formwork for superstructure onto the scaffold.

Quality control

All types of reinforcement to be installed at individual portions of construction work in accordance with the design must comply - by their properties and quality testing methods - with requirements of these GTR and in EN 10080. The reinforcing steel supplier shall submit evidence confirming that properties of the proposed steel comply with requirements given in the design.

The reinforcement will be fabricated as shown in the design and in accordance with HR EN 10080 and EN1992-1-1.

Calculation of work

The work will be calculated per kilogram (kg) of reinforcement placed, depending on the type of reinforcement (GA, RA, MAG, MAR, Bi). The unit price will be calculated for steel up to 12 mm in diameter, and for steel in excess of 12 mm in diameter. The unit price will include supply of reinforcement, inspection, cleaning and selection prior to fabrication, bending, cutting and transport to the site, as well as placing at the specified location.

The price also includes all accessory material used during placing of the reinforcement (such as annealed wire, ties, plates, bar spacers).

4.5.4 STEEL AND METAL WORK

Steel and metal works include installation of gates, grate dampers, typical step irons, and step irons with back protection made of steel resistant to salt and oil derivatives.

Installation of gates

Description of work

The work covers purchase and delivery of the plate-shaped steel gate with the lifting device, its assembly together with the lifting device at the wall of the manhole, and the inspection of the functionality of the gate.

The steel gate is made of the gate plate, frame, spindle, rubber gaskets and the gate lifting and lowering device.

The gate is ordered by specifying dimensions of the opening in the manhole wall, the height together with the spindle and possible extensions, and the depth from the ground level to the bottom sill in the manhole wall. The gate will be fixed with bolts or anchoring plates onto the manhole wall.

Quality control

The gate plate and the frame must be made of stainless structural steel with properties as specified in EN. Properties of stainless steel out of which the spindle will be made are specified in EN. The gate and frame must be coated with protective paint.

Calculation of work

The work will be calculated per unit, and the price of the set includes supply of the gate plate, frame, spindle, gasket, fastening material, and the lifting and lowering device, as well as the transport, assembly and final functionality check.

Installation of dampers

Description of work

The work covers purchase and supply of the plate-shaped steel damper, its installation onto the wall of the primary protection structure, and damper functionality check. The steel plate damper will be fabricated in accordance with the corresponding workshop drawing. The corrosion protection must be realized as specified in these GTR.

Quality control

The damper and frame must be made of stainless structural steel with properties as specified in EN. The damper and frame must be coated with protective paint.

Calculation of work

The work will be measured per unit, and the price of the set includes supply of the damper, frame, fastening materials, transport, assembly and final functionality check.

Installation of steps with back protection

Description of work, materials and construction

The work covers supply of material, fabrication of steps, protective coatings, and the supply and assembly of steps providing access to the separator, all in accordance with the corresponding workshop drawing.

Workshop activities for the fabrication of steps will be preceded with the supply of materials, while step iron installation work will follow after completion of concrete work for the separator. The primary protection structure may be put into operation after completion of step iron installation and other finishing activities.

Steps will be made of stainless steel resistant to aggressive action of water. Steps will be fabricated in

workshop based on the corresponding workshop drawing.
The work in the workshop starts with the cutting of steel sections and their assembly, and is followed by welding, all in accordance with detail drawings. The corrosion protection must be realized in accordance with provisions contained in these GTR.

Quality control

The quality of stainless steel sections out of which steps are made must be compliant with applicable EN and ARDM.

Steps will be installed in accordance with the design, and the installation work will be checked by the Supervising Engineer. In this respect, the accuracy of step iron placing and positioning will be checked.

Calculation of work

The work will be measured per unit of properly installed step iron with back protection. The unit price includes supply of material, fabrication of steps, transport to the site and installation.

Installation of step irons

Description of work

The work covers supply of typical step irons and their installation into walls of primary protection structures and manholes.

Stainless steel step irons will be anchored into the manhole wall through formwork openings as specified in the design. Step irons are typical factory-made stainless steel elements.
The anchoring process will have to be carried out in such a way that step irons are not moved during concreting and concrete vibrating activities. The Supervising Engineer will check the reinforcement and step iron positions prior to the start of concreting work.

Quality control

The Contractor will have to prove quality of materials and step irons by a document attesting to their acceptability. The original of this document shall be submitted to the Supervising Engineer prior to installation.

Calculation of work

The work will be measured per kilogram of step irons placed. The unit price also includes supply of material, installation of step irons, double protective coating and, if required by the manufacturer, supply of such coating to the site and placing.

Installation of manhole covers

Description of work, materials and construction

The work covers supply and installation of frames and cast iron covers, as specified in the design.

Quality control

Cast iron covers with frames are factory-made products that must comply with bearing capacity and durability requirements as specified in the design. The installation tolerance with respect to positioning and levels must be within ± 10 mm.

The Contractor is required to submit to the Supervising Engineer an original document attesting to the acceptability of these items.

Calculation of work

The work will be calculated per unit of cover that has been duly fabricated and installed. The price includes supply and installation of the frame and cover. The item includes all additional material, accessories and work needed for an appropriate installation of the frame and cover.

4.5.5 PERMEABILITY TESTING

Prior to testing permeability of a device, the entire structure must be checked from outside and inside in order to determine whether all functional units are connected into a whole that is capable of functioning in accordance with technical and technological specifications given in the design. This concerns checking passability of the entry and exit channel, as well as the appropriate positioning of partitions, weirs, discharge weirs, damping plates, covers, descending ladders and dampers.

It should also be checked whether some residual construction material is still in the separator - formwork, structural steel, earth or other waste material. If any such material is present, it has to be extracted and transported to an appropriate place of disposal.

Visual checks must be made to determine whether there are any indications of permeability in lateral and partition walls (such as cracks, segregation or pockets). If such indications are present, appropriate repair must urgently be requested.

If separator walls are plastered, the plaster shall be tested by tapping on it with a metal object prior to the first filling with water. If the tapping sound shows that there are some holes under the plaster, the plaster will have to be removed from such locations and replaced with new plaster.

The water impermeability will be checked by the Contractor in accordance with provisions contained in applicable standards.

The permeability testing will be performed by filling the separator and the overflow shaft with water up to 50 cm above the highest water level. Prior to this, all entry (exit) points on the separator will have to be closed.

The water level will have to be checked at every 24 hour intervals during 14 days, and on the fourteenth day the commission (formed of the Contractor, Employer and Supervising Engineer) will check the water level in each chamber, after which all entry points will be locked and sealed.

The seal will be removed by the same commission after 24 hours and the lowering of the water level will be recorded. If the lowering amounts to more than 2 mm, the procedure will be repeated.

If it is established, during three measurements made by the commission, that the water level has fallen by more than 3 mm in 24 hours, it will be concluded that the structure is not fully impermeable, and the causes will have to be identified and eliminated.

After completion of the permeability testing, the clean water will be added - if necessary to the separator so that the water level is flush to the bottom of the entry pipeline. The damper at the entry to the separator must be in fully open position.

Permeability testing costs shall be borne by the Contractor.

5. RETAINING WALLS

5.1 GENERAL REMARKS

This section specifies minimum quality requirements for materials, products and works as applied during realization of retaining walls. The GTR are written in such a way that they form a part of the contract while requirements relating to special works are included in the contract as Special Technical Requirements (PTU).

Materials, products, equipment and works must comply with the standards and technical regulations specified in the design documentation. If no standard is specified, then an appropriate EN (European standard) must be applied. If a standard or regulation becomes invalid during realization of the project, it will be substituted by an appropriate replacement standard or regulation.

The Contractor may propose application of generally recognized technical rules (standards) issued by a foreign standardization body (such as ISO, EN, DIN, ASTM, etc.), subject to written explanation and approval of the Supervising Engineer. This change may be accepted by the Supervising Engineer if approved by the Designer. The Contractor is required to register this change in the working design.

5.1.1 DEFINITIONS

General terms and expressions, with the meanings they have in these General Technical Requirements, are presented in Section 1. The following terms are additional terms that are especially relevant to this section:

Retaining walls are massive or segmented, permanent or temporary structures that retain vertical or steep side cuts, or a backfill material.

Facing walls are lighter structures, either compact or segmented, which protect vertical or steep side cuts that are statically stable and not subject to natural erosion.

Flume is concrete or clay oval base for drainage pipes.

Soakaways are pipes passing through retaining walls and serving for drainage of water that has accumulated behind the wall.

Hammer chiseling of stone is shaping of stone surface with hammer and chisel.

Bit chiseling is the act of shaping the stone surface with chiseling bit.

Roughening is the treatment of stone surface with toothed hammer.

Stone edging is the treatment of stone edges with a chisel.

5.2 CONSTRUCTION OF WALLS

Description of work

The work will be carried out in accordance with the design, applicable regulations and provisions contained in these GTR. The wall construction work includes, but is not limited to: inspection of terrain prior to commencement of work, setting out works, excavation work for foundations, concrete and reinforcement placing, construction of concrete flumes, drainage pipe laying, construction of manholes and cross drainage outfalls, construction of soakaways, construction of dry stone backings and filters, construction of clay plugs above drainage facilities, and site restoration after completion of the work.

The work must be carried out in accordance with the design, appropriate regulations, Quality Control and Quality Assurance Program, Construction Management Design, Supervising Engineer's requirements, and these GTR. Additional and subsequent work may be carried out subject to prior approval by the Supervising Engineer.

Materials

Concrete

The concrete for walls within foundations and outside of the foundations must be fully compliant with requirements given in the design, and must comply with relevant regulations for concrete and reinforced concrete, and with provisions contained in these GTR.

Reinforcement

If retaining and facing walls are made of reinforced concrete, the reinforcement must comply with requirements given in the design, as well as with relevant regulations for the concrete and reinforced concrete, and with provisions contained in these GTR.

Broken stone

The stone used in masonry work must be clean, sound, resistant to freezing, without portions that are likely to decompose in water, and without visible or hidden cracks. The compressive strength of stone for walls must be at least 70.0 MN/m^2, while it should amount to at least 100.0 MN/m^2 for vaults.

The value of water absorption should not be greater than 1% m/m. If the water absorption value is higher, the resistance of stone to freezing will have to be proven during 50 cycles of freezing and thawing, and its resistance to water will be measured by determining the softening coefficient, i.e. the relationship between the stone strength in dry state and its strength in water saturated state. Other properties of stone must be compliant with quality requirements as contained in these GTR.

Mortar

The cement mortar is used for the construction of walls and for other road-related works. The quality of cement, sand and water must be in accordance with relevant provisions contained in these GTR.

The grain size of the sand used for mortar shall range from 0.2 to 5 mm.

The cement mortar for masonry work, i.e. for plastering, shall be prepared in accordance with criteria applied for concrete (principal parameters are: water/cement ratio, consistence, density). Mortar used in masonry work must be sufficiently plastic but shall not be liquid. Mortar must be fabricated in such quantity that it can fully be placed before it starts to set. The minimum compressive strength of mortar shall be 25 MN/m^2.

Formwork

Formwork should be avoided whenever possible during construction of foundations for retaining walls. The formwork for retaining walls must be built in such a way that exposed surfaces are completely even and smooth, and must comply with appropriate regulations for concrete and reinforced concrete, and with provisions contained in these GTR.

Activities

Prior to construction work, the Contractor and Supervising Engineer shall examine the terrain in full detail to establish whether the terrain and the soil are compliant with provisions contained in the design and in Construction Management Design (POG). If this is not the case, the design and the technology of work must be adapted to actual on site conditions.

5.2.1 EXCAVATION FOR FOUNDATIONS

The excavation work for foundations will be carried out in the soil class "A", "B" or "C", according to dimensions given in the design. Only the area specified in the design, or an area subsequently approved by the Supervision Engineer, shall be recognized as excavation, i.e. the overbreak shall not be taken into account in the calculation of quantities.

The Contractor is required to fill, at his own expense, any overbreak due to his error, with concrete, stone material or compacted earth, depending on the situation on the terrain, and in accordance with instructions of the Supervising Engineer.

When necessary because of specific on-site conditions (depth of excavation, instability of the terrain), the excavation will have to be shored and propped with an appropriate structure and formwork.

If foundations for walls are built in silty of clayey material, the final 20-30 cm of soil will have to be excavated immediately prior to concreting so as to avoid any soil softening at foundation bottom in case of rain.

To prevent loss of slope stability during excavation work, the walls will have to be built in sections and this by skipping every second section. The length of such sections should be adapted to on site conditions.

The foundation bottom must be thoroughly checked to determine whether it is suitable for wall foundations and, if found unsuitable, the excavation will have to be deepened.

5.2.2 CONCRETING OF WALL FOUNDATIONS

The foundation concreting may commence only after the Designer and the Supervising Engineer have approved the foundation pit.

The quality of concrete must be compliant with the design and relevant technical documentation. The concrete must be in accordance with appropriate regulations for concrete and reinforced concrete, and with provisions contained in these GTR.

If the excavation for wall foundations is to be strutted, no portion of the formwork or strut shall be left in the foundation. An appropriate quantity of sound broken stone may be added to the concrete. This broken stone must be clean, wetted with water, and properly distributed within the foundation.

The added stone may take up no more than 30 percent of the volume of foundations, and the maximum stone size shall not be greater than one half width of foundations, but shall in no case exceed 30 cm. Every stone must be fully covered with concrete.

The concrete will be placed using vibratory equipment.

5.2.3 CONCRETING WALL OUTSIDE OF FOUNDATIONS

The wall situated outside of foundations shall be concreted in properly fabricated and prepared formwork in such a way that wall dimensions and levels are compliant with the design.

The quality of concrete is defined in the design and must comply with relevant regulations for concrete and reinforced concrete, as well as with provisions given in these GTR. The concrete and reinforcement of the retaining wall will be placed as indicated in the design, and shall also be compliant with the mentioned provisions.

The concrete shall be mixed mechanically, and shall be vibrated during placing so as to avoid segregation and to obtain concrete characterized by smooth and even surface. Horizontal breaks in concrete will not be allowed. However, if such breaks occur anchors made of reinforcement shall be placed at the wall break and this in quantity of 0.3 percent of the concrete cross section, and the contact surface shall be treated in same way as the concrete surface is treated in case when concrete work is to be resumed.

Concrete walls with stone lining shall be concreted at the rate corresponding to the rate at which the stone lining is placed.

5.2.4 CALCULATION OF WORK

The excavation will be measured per cubic meter of material in accordance with the design or based on subsequently approved modifications. In case of structures built in the cutting or in side cut, the excavation of foundations will be calculated as such only up to the subgrade level, while the remaining excavation will be calculated as wide excavation.

The concrete for foundations will be measured per cubic meter of concrete placed, with possible addition of stones into the foundation work.

The concrete for walls will be measured per cubic meter of concrete placed.

The stone wall will be measured per cubic meter of completed stone wall.

The concrete flume and drainage pipe will be measured per linear meter of flume and drainage pipe placed.

Transverse drainage outfalls will be measured per linear meter of pipes placed.

Manholes will be measured per cubic meter of concrete placed and, in case of prefabricated manholes, the calculation will be based on linear meters of pipes placed.

Soakaways will be measured per linear meter of pipes placed.

Stone backings will be measured per cubic meter of completed backing.

The filter layer behind the retaining wall will be measured per cubic meter of filter layer placed.

The clay plug will be measured per cubic meter of placed and compacted clay.

The quality of backfill behind the retaining wall will not be measured separately but will be included in the item covering road embankment construction.

All work included in Section 4 of these GTR will be paid for according to contract unit prices for the unit of measure applied for a particular work. The unit price includes all work, supply of material, transport and everything else that is needed for the completion of work.

In addition:

a) The unit price for excavation also includes the cost of foundation pit shoring and bracing, pumping water from the foundation pit, cofferdam construction when needed, and trimming of pit sides, if excavation is made in stone material. The price also includes transport of excavated material to embankment for distances up to 20 m in length, as well as backfilling and compaction of soil around foundations.

b) The unit price of concrete for foundations also includes all cost of materials and fabrication activities, including transport, work accessories and any means of concrete protection after placing, as well as all required formwork, reinforcement, anchors, etc.

c) The unit price of concrete for walls also includes all cost of materials and fabrication activities, including transport, work accessories and any means of concrete protection after placing. The fabrication of reinforcement and reinforcement connections is included in the unit price and will not be charged separately. The unit price for concrete includes all formwork, scaffolding, and all required shoring or bracing.

d) The unit price for concrete flumes and drainage pipes includes all material and work, transport, surface preparation, all required shoring and bracing, as well as protection of drainage pipes with gravel or crushed stone 1-6 cm in size, along the top portion of the pipe.

e) The unit price of transverse outfalls includes all work and material, excavation of ditches for transverse outfalls, bedding preparation, pipe laying, backfilling transverse outfall ditches, and all work needed at outfall points.

f) The unit price per cubic meter of concrete for manholes includes all material and work needed for manhole completion. This also implies supply and placing of concrete, pipes, formwork, covers, step irons, and similar items. In case of prefabricated manholes, the price per linear meter includes supply, transport and assembly of pipes, prefabricated elements and everything else that is needed for full completion of manholes.

g) The unit price for soakaways includes pipe supply and laying, and everything else that is needed for completion of soakaways.

h) The unit price for stone backing and stone walls includes supply, selection and placing of stones, i.e. wall construction, as wall as excavation shoring and bracing when required.

i) The unit price for filter includes all material and work needed for the completion of filter layer.
j) The unit price for the realization of clay plug includes supply, transport and placing of clay material.

The work relating to the clearing and reinstatement of terrain is included in the above mentioned work items.

5.2.5 SITE CLEARING

After completion of the work, the site shall be cleared from debris and excess material, and the surrounding terrain shall be reinstated.

5.2.6 QUALITY CONTROL

Prior to commencement and during realization of work, the quality of materials, products and works must be controlled in accordance with requirements for materials and works as specified in other sections of these GTR.

Prior to commencement of works, the Contractor shall be required to prove quality of prefabricated elements used in wall construction by obtaining an appropriate technical documentation, conformity certificate and manufacturing quality certificate, as issued by competent institution, and shall submit an original copy of this documentation to the Supervising Engineer for approval.

5.3 REINFORCED EARTH WALLS (MSE WALLS)

5.3.1 DESCRIPTION

This work consists of constructing mechanically-stabilized earth (MSE) walls.

Reinforcement geotextile and geogrid are designated according to EN.

5.3.2 MATERIAL

Materials are conform to the relevant sections of these GTR:

Concrete
Concrete masonry units
Geotextile
Mechanically-stabilized earth wall material
Reinforcement geotextile and geogrid
Select granular backfill
Unclassified borrow

5.3.3 CONSTRUCTION REQUIREMENTS

Verify limits of the wall installation. Submit installation drawings.

Perform the work under the requirements of these GTR. Grade the foundation for a width equal to the

length of reinforcing elements plus the additional width shown on the plans.

When required, as determined by the Contractor, design and construct temporary shoring with consideration of maintenance of traffic requirements.

For concrete panel and block-faced walls, provide a precast reinforced or a non-reinforced cast-inplace concrete leveling pad. Cure cast-in-place leveling pads at least 12 hours before placing wall panels.

5.3.4 WALL ERECTION

Erect the wall according to the drawings and manufacturer's recommendations. Have an field representative from the wall system manufacturer on-site during the startup of wall erection. Construct MSE walls to the tolerance requirements of Table below:

Construction Tolerance

Facing Type	+/-Vertical Tolerance(1)	+/- Horizontal Tolerance(2)	+/- Horizontal Straight Edge Point Check(3)
Precast concrete panel, masonry block units	15 mm	15 mm	15 mm
Welded wire, gabions	38 mm	38 mm	75 mm

Table 13 - Construction Tolerance

(1) Wall vertical tolerance at top of wall for every 3 meters of wall height. For example 20 meter wall height multiply 6.5×value.
(2) Wall horizontal tolerance at top of wall for every 3 meters of wall height.
(3) Maximum horizontal deviation at any point in the wall from a 3-meter straightedge placed horizontally or vertically on the theoretical plane of the design face.

(a) Precast concrete panel-faced. Erect panels by means of lifting devices connected to the upper edge of the panel.

Make the joint openings19±6 millimeters wide. Install joint material according to the drawings. Cover joints on the backside of the panels with a 300-millimeter wide strip of geotextile filter. Overlap geotextile filter splices at least 100 millimeters.

Hold the panels in position with temporary wedges or bracing during backfilling operations.

(b) Wire-faced. Place backing mats in successive horizontal lifts as backfill placement proceeds. Connect, tighten, and anchor soil reinforcement elements to the wall facing units before placing backfill. Do not place reinforcing elements below the corresponding connection elevations. Pull and anchor the reinforcement mesh taut before placing additional backfill. Do not use hardware cloth or geosynthetic material to retain backfill at the face of the wall.

5.3.5 BACKFILLING

Backfill the stabilized volume with select granular backfill according to the road embankment specifications. Place select granular backfill material from the back of the wall face to the end of the reinforcement. Ensure that no voids exist below the reinforcement. Compact each layer, except use an acceptable lightweight mechanical or vibratory compactor within 900 millimeters of the wall face. Consolidate facing backfill by rodding or other approved means to produce a uniform, tight facing fill. Where the stabilized volume supports spread footings for bridges or other structural loads, compact the top 1.5 meters to at least 100 percent of the maximum density.

Do not damage or disturb the facing or reinforcing elements. Do not operate equipment directly on top of the reinforcing mesh or strips. Correct damaged, misaligned, or distorted wall elements.

Backfill and compact behind the stabilized volume with unclassified borrow. At the end of the day's operation, slope the last lift of backfill away from the wall face to direct surface runoff away from the wall. Do not allow surface runoff from adjacent areas to enter the wall construction area.

5.3.1 ACCEPTANCE

See Table below for sampling, testing, and acceptance requirements.

Material for mechanically-stabilized earth walls will be evaluated under Subsections above. Submit a production certification with each shipment of concrete face panels.

Construction of mechanically-stabilized earth walls will be evaluated under Subsections above.

Geotextile filters and reinforcement geotextile and geogrid will be evaluated under relevant section.

Structure excavation, select granular backfill, and unclassified borrow will be evaluated under relevant sections .

Concrete leveling pad will be evaluated under concrete Section.

5.3.2 MEASUREMENT

Measurepay items listed in the bid schedule according to Subsection of these GTR and the following as applicable:

When measuring mechanically-stabilized earth walls by the square meter, measure the front face of wall excluding footings.

When measuring select granular backfill within the stabilized volume by the cubic meter, measure in accordance with design geometry.

5.3.3 PAYMENT

The accepted quantities will be paid at the contract price per unit of measurement for the pay item listed in the bid schedule. Payment will be full compensation for the work prescribed in this Section.

5.4 EARTHWORK GEOSYNTHETICS

This work consists of furnishing and installing geotextile in separation, stabilization, and filter applications, geogrid in stabilization applications, and geomembrane in moisture barrier applications.

Geosynthethics are designated according to the tables in Section 5.5

Material. Conform to the following Subsections:

Geomembrane	section 5.5.5
Geotextile	section 5.5.1
Stabilization geogrid	section 5.5.3

5.4.1 GENERAL

Identify, store, and handle geosynthetics according to ASTM D4873 and the manufacturer's recommendations. Elevate and protect geosynthetic rolls with a waterproof cover if stored outdoors. Limit geosynthetics exposure to less than 10 days of ultraviolet radiation.

For seams sewn on-site, conform to the manufacturer's recommendations. Obtain approval of the seam before installation. Use thread consisting of high strength polypropylene or polyester. Do not use nylon

thread. Use thread that is resistant to ultraviolet radiation and a contrasting color to the geotextile.

Submit a seam assembly description and a sample of the sewn material at least 14 days before installation when geosynthetic joints are sewn as follows:

(a) Assembly description. Include the seam type, seam allowance, stitch type, sewing thread tex ticket numbers and types, stitch density, and stitch gauge.

(b) Sewn seam samples. Sew seam samples using the same equipment and procedures used to sew production seams. Submit samples that have at least 6 feet (1.8 meters) of sewn seam and are at least 5 feet (1.5 meters) wide. If production seams are sewn in both the machine and cross-machine directions, provide sewn seam samples that are oriented in both the machine and cross-machine directions.

Replace or repair geosynthetic that is torn or punctured. Remove the damaged area and place a patch of the same type of geosynthetic overlapping 900 millimeters beyond the damaged area or sew a seam around the damaged area.

Geotextile and Geogrid Separation and Stabilization Applications

(a) Surface preparation. Before placing the geotextile, geogrid, or both, prepare the surface as follows:

(1) Existing ground. Cut trees and shrubs flush with the ground surface. Do not remove the topsoil and vegetation mat. Clear the area of vegetation and obstructions. Remove sharp objects and large rocks. Fill depressions or holes with suitable material to provide a smooth surface.

(2) Subgrade. Prepare the subgrade according to subgrade section

(3) Subexcavation. Perform subexcavation according to excavation section

(b) Geotextile or geogrid placement. Place geogrid on top of geotextile when both are shown at the same elevation in the plans. Place the geosynthetic smooth, taut, and wrinkle free on the underlying surface. Conform to curves. Overlap in the direction of construction. Overlap at least 600 millimeters at the ends and sides of adjoining sheets or sew the joints according to the manufacturer's recommendations. Do not place longitudinal overlaps below anticipated wheel loads. Hold the geosynthetic in place with pins, staples, or piles of cover material.

(c) Backfilling.

(1) First layer placement and compaction. End dump the backfill material onto the geotextile or geogrid from the edge of the geosynthetic or from previously placed cover material. Do not operate equipment directly on the geosynthetic. Spread the end-dumped pile of cover material maintaining a 300 millimeters lift over the geosynthetic. Avoid sudden stops, starts, or turns of the construction equipment. Fill ruts from construction equipment with additional cover material. Do not blade material down to remove ruts. If rutting exceeds 75 millimeters during placement, decrease the construction equipment size, decrease the equipment weight, or increase the first lift thickness as directed by the Engineer.

Compact according these GTR. Do not use sheepsfoot or studded compaction equipment. Compact the cover material with pneumatic-tire or nonvibratory smooth drum rollers.

(2) **Subsequent layer placement and compaction.** Place subsequent layers.

Compact according to these GTR. Vibratory rollers may be used unless pumping or foundation failures occur. Repair damaged areas and then use only nonvibratory rollers.

5.4.2 REINFORCEMENT GEOTEXTILE AND GEOGRID

See Section 5.5 for reinforcement geotextile and geogrid placement.

5.4.3 GEOTEXTILE FILTER APPLICATIONS

(a) **Geotextile placement.** For slope or wave protection, place the long dimension of the geotextile down the slope. For stream bank protection, place the long dimension of the geotextile parallel to the centerline of the channel.

Overlap or sow seams at the ends and sides of adjoining sheets.

(1) **Overlapping.** Overlap the uphill or upstream sheet over the downhill or downstream sheet. For above water applications, overlap the geotextile at least 300 millimeters. For underwater applications, overlap the geotextile at least 900 millimeters.

(2) **Sewing.** Sew the geotextile seam according to the manufacturer's recommendations.

Offset end joints of adjacent sheets at least 1.5 meters. Use key trenches or aprons at the crest and toe of slopes to hold the geotextile in place. As an alternative use anchor pins, at least 450 millimeters long and spaced at 900 millimeters centers to hold the geotextile sheets in place.

(b) **Backfilling.** Place aggregate, slope protection, or riprap on the geotextile starting at the toe of the slope and proceeding upward. Place riprap onto the geotextile from a height of less than 300 millimeters. Place slope protection rock or aggregate backfill onto the geotextile from a height less than 900 millimeters. Do not allow stones weighing more than 45 kilograms to roll down the slope. In underwater applications, place the geotextile and cover material in the same day.

5.4.4 ACCEPTANCE

Geosynthetics will be evaluated under section above. Submit a production certification for geosynthetics.

Geosynthetic installation will be evaluated under Subsections 5.5.

5.4.5 MEASUREMENT

When measuring geosynthetics by the square meter, measure on the plane parallel to the slope face.
Do not measure overlapping material.

5.4.6 PAYMENT

The accepted quantities will be paid at the contract price per unit of measurement for the pay item listed in the bid schedule. Payment will be full compensation for the work prescribed in this Section.

Section Payment reference		
Sec. No.	**Description**	**Unit**
5.5.5	Geomembrane	m^2
5.5.1	Geotextile	m^2
5.5.3	Stabilisation geogrid	m^2

5.5 GEOSYNTHETIC MATERIAL

5.5.1 GEOTEXTILE

Use long-chain synthetic polymers composed of at least 95 percent by mass of polyolefins or polyesters to manufacture geotextile and the threads used in joining geotextile by sewing. Form the geotextile, including selvedges, into a stable network such that the filaments or yarns retain their dimensional stability relative to each other.

Property values, with the exception of apparent opening size (AOS), in these specifications represent minimum average roll value (MARV) in the weakest principal direction (i.e., average test results of any roll in a lot sampled for conformance or quality assurance testing must meet or exceed the specified values). Values for AOS represent maximum average roll values.

Conform to the following physical requirements:

(a) Separation and stabilization geotextile and geotextile filter. Conform to Table below:

Minimum Strength and Durability Properties						
Strength Property	**Test Method ASTM**	**Units**	**Class 1**		**Class 2**	
Type of Geotextile			**Woven**	**Nonwoven**	**Woven**	**Nonwoven**
Elongation at break	D4632	%	<50	≥50	<50	≥50
Grab strength	"	N	1420	890	1110	710
Sewn seam strength	"	N	1290	800	980	620
Tear strength	D4533	N	490	360	400	240
Puncture strength	D6241	N	2760	1910	2220	1380
Ultraviolet stability	D4355	%	50% retained strength after 500 hours of exposure			

Hydraulic Properties							
Hydraulic Property	**Test Method ASTM**	**Units**	**Type A**	**Type B**	**Type C**	**Type D**	**Type E**
Minimum permittivity	D4491	s-1	0.7	0.5	0.2	0.1	0.1
Maximum apparent opening size (AOS)	D4751	mm	0.425	0.425	0.250	0.425	0.212

Table 14 - Separation and Stabilization Geotextile and Geotextile Filter Requirements

(1) Do not use woven slit film geotextile.

(b) Paving geotextile. Conform to Table below.

Property	Test Method	Units	Specifications
Type of Geotextile			Nonwoven
Grab strength	ASTM D4632	N	

Elongation at break	ASTM D4632	%	490
Asphalt retention	ASTM D6140	L/m²	≥ 50 (1)
Mass per unit area	ASTM D5261	g/m²	135 - 200
Melting point	ASTM D276	ºC	150

Table 15 - Paving Geotextile Requirements

(1) Asphalt required to saturate fabric only. Value supplied by manufacturer in material certification. Value does not indicate the asphalt application rate required for construction. Product asphalt retention property must meet the MARV value provided by the manufacturer's certification.

5.5.2 GEOCOMPOSITE DRAIN

Furnish a prefabricated geocomposite composed of a drainage core and a non-woven geotextile that permits in-flow from both sides. Geocomposites that only permit inflow from one side may only be used directly against a concrete surface. Furnish geotextile and drainage core manufactured from long chain synthetic polymers composed at least 95 percent by mass of polypropylene, polyester, polyamide, polyvinyl chloride, polyolefin, or polystyrene. Build the core up in thickness by means of columns, cones, nubs, cusps, meshes, stiff filaments, or other configurations. Fabricate the core in sheets, panels, or rolls of adequate strength to resist installation stresses and long-term loading conditions.

Property values, with the exception of fungi resistance, in these specifications represent minimum average roll value (MARV) in the weakest principal direction (i.e., average test results of any roll in a lot sampled for conformance or quality assurance testing must meet or exceed the specified values).

Furnish a nonwoven encapsulating geotextile meeting requirements of Table 714.1. Firmly attach the encapsulating geotextile to the core at the manufacturing plant, so that folding, wrinkling, or other movement cannot occur during handling or after placement. Use a non-water-soluble adhesive, heat sealing, or other methods recommended by the geotextile manufacturer. Do not use adhesive on areas of the geotextile where flow is intended to occur.

If heat sealing is used, do not weaken the geotextile below the required strength values. Extend the geotextile beyond the core length on all sides sufficiently to encapsulate the core and collector pipe.

Conform to Table below:

Property	Test Method	Units	Specifications		
			Sheet Drain	Strip Drain	
			Type 1	Type 1	Type 2
Transmissivity (flow rate) (1)	ASTM D4716	m³/sec/m	0.0010	0.0031	0.0041
Compressive strength at yield	ASTM D1621	kPa	690	340	340
Applied normal compressive stress	ASTM D4716(4)(5)(6)	kPa	100	10	10
Hydraulic gradient	ASTM D4716(2)(3)(4)	dimensionless	1.0	0.1	0.1
Fungi resistance	ASTM G21	–	No visible growth		
Geotextile	See Table 14	–	Nonwoven		

Table 16 - **Geocomposite Drain Requirements**

(1) If core construction separates the flow channel into two or more discrete sections, only the flow rate on one in-flow face is considered in determining the core's acceptability.

(2) (350 millimeter long specimen.

(3) 100-hour seating period.

(4) Rubber membrane between platens and geocomposite.

5.5.3 GEOMEMBRANE APPLICATIONS

Submit a geomembrane installation plan at least 10 days before installing the geomembrane. Include a drawing of the panel layout identifying the location of seams. Include a seam detail and a written description of the seaming procedure.

(a) Surface preparation. Provide a smooth, flat, firm, unyielding foundation for the geomembrane with no sudden, sharp, or abrupt changes or break in grade. Remove rocks, stones, sticks, sharp objects, and debris of any kind protruding more than 13 millimeters above the prepared surface.

(b) Geomembrane placement. Orient seams parallel to the line of maximum slope. Use sandbags or piles of cover material to hold the geomembrane in place. Do not drive equipment directly on the geomembrane.

(c) Backfilling. Place backfill material within the same work shift that the geomembrane is installed. End dump backfill material onto the edge of previously placed cover material and roll it into place. Do not push material along the geomembrane which can result in damage or wrinkling.

5.5.4 STABILIZATION GEOGRID

Furnish biaxial geogrid manufactured using long-chain synthetic polymers composed of at least 95 percent by mass of polyolefins, polyesters, or polyamides. Fabricate the geogrid into a stable network such that the ribs, filaments, or yarns retain their dimensional stability relative to each other, including selvages.

Property values, with the exception of maximum opening size, represent minimum average roll values (MARV) (i.e., average test results of any roll in a lot sampled for conformance or quality assurance testing must meet or exceed the minimum specified values). The value for maximum opening size represents maximum average roll value. Conform to Table below.

Property	Test Method	Units	Specifications
Minimum opening size	N/A(2)	mm	13
Maximum opening size	N/A(2)	mm	75
Tensile strength at 2% strain	ASTM D6637	kN/m	5.8
Tensile strength at 5% strain	ASTM D6637	kN/m	11.7
Ultimate tensile strength	ASTM D6637	kN/m	19.0

Junction strength	GRI(3) GG2	N	110
Ultraviolet stability (retained strength)	ASTM D4355	percent	50% retained strength after 500 hours of exposure

Table 17 - Stabilization Geogrid Requirements

(1) Strength values are in the weaker principal direction.

(2) Direct measure with caliper.

(3) Geosynthetic Research Institute.

5.5.5 REINFORCEMENT GEOTEXTILE AND GEOGRID

Furnish reinforcement geotextile manufactured using long-chain, synthetic polymers, composed at least 95 percent by mass of polyolefins or polyesters. Form the geotextile, including selvedges, into a stable network such that the filaments or yarns retain their dimensional stability relative to each other.

Furnish reinforcement geogrid manufactured as a regular network of integrally-connected longitudinal and transverse polymer tensile elements with a geometry that permits significant mechanical interlock with the backfill. Provide geogrid composed of fibers or ribs that are at least 95 percent by mass polypropylene, polyethylene, or polyester. The geogrid structure must remain dimensionally stable under construction stresses and have a high resistance to damage during construction, to ultraviolet degradation, and to chemical and biological degradation encountered in the soil being reinforced.

Conform to Tables below:

Polymer Type	Property	Test Method	Specifications
Polypropylene and polyethylene	Ultraviolet stability	ASTM D4355	Minimum 70% retained strength after 500 hours of exposure
Polyester	Ultraviolet stability	"	"
Polypropylene and polyethylene	Thermo-oxidation resistance	ENV ISO 13438: 1999, Method A (polypropylene) or Method B (polyethylene)	Minimum 50% retained strength after 28 days (polypropylene) or 56 days (polyethylene)
Polyester	Hydrolysis resistance	ASTM D4603 & GRI GG8 (1)	Minimum number average molecular weight (M_n) of 25,000
		GRI GG7 (1)	Maximum carboxyl end group (CEG) of 30
All polymers	Mass per unit area	ASTM D5261	Minimum 270 g/m^2
	Percent post consumer recycled material by mass	Certification of material used	Maximum 0%

Table 18 - Reinforcement Geotextile and Geogrid Polymer Requirements

Table 19 - Reinforcement Geotextile and Geogrid Strength Requirements

Property	Test Method ASTM	Units	Specifications					
			Type I	Type II	Type III	Type IV	Type V	Type VI
Ultimate strength (3) (T_{ult})	D4595 or D6637 (4)	kN/m	29.2	43.8	58.4	73.0	87.6	116.8
Nominal long-term strength (T_{al})		kN/m	14.6	21.9	29.2	36.5	43.8	58.4

(1) For reinforcement geotextile, also meet the Class 1 strength requirements in Table 15 and the ultraviolet stability requirements in Table 16.
(2) The specified strength is in the principal direction of reinforcement, i.e. perpendicular to the wall or slope face.
(3) Based on minimum average roll value (MARV).
(4) Test Method ASTM D4595 is for geotextile and ASTM D 6637 is for geogrid.
(5)

5.5.6 GEOMEMBRANE

Furnish geomembrane that consists of textured (roughened) surface polyvinyl chloride, high density polyethylene, or linear low density polyethylene geomembrane with a thickness of 0.72 to 0.80 millimeters. Glue or weld seams of the geomembrane to prevent leakage.
Conform to Table below.

Type of Geomembrane	Specifications
Polyvinyl chloride (PVC)	ASTM D7176(1)
High density polyethylene (HDPE)	GRI(2) GM13
Linear low density polyethylene (LLDPE)	GRI(2) GM17

Table 20 - Geomembrane Requirements

(1) The minimum average asperity height is 0.25 millimeters. Of 10 readings, 8 of 10 must be greater than or equal to 0.18 millimeters, and the lowest individual reading must be greater than or equal to 0.12 millimeters.

6. CRUSHED STONE LAYERS

6.1 General

This work consists of constructing one or more courses of untreated aggregate base on a prepared surface. Subbase and base aggregate grading is designated according to Tables below.

After a representative quantity of aggregate is produced, submit proposed target values for the appropriate sieve sizes along with a representative 300-pound (150-kilogram) sample at least 14 days before incorporating the aggregate into the work.

Set target values within the gradation ranges shown in Table 703.2 or 703.3 for the required grading.

6.2 Mixing and Spreading

Determine the optimum moisture content according to AASHTO T 180, Method D. Mix the aggregate and adjust the moisture content to obtain a uniform mixture with a moisture content within 2 percent of the optimum moisture content. Spread and shape the mixture on the prepared surface in a uniform layer.

Do not place the mixture in a layer exceeding 150 millimeters in compacted thickness. When more than one layer is necessary, compact each layer before placing the next layer. Route hauling equipment uniformly over the full width of the surface to minimize rutting or uneven compaction.

Determine the maximum density of the mixture according to AASHTO T 180, Method D.

Compact each layer full width. Roll from the sides to the center, parallel to the centerline of the road. Along curbs, headers, walls, and places not accessible to the roller, compact the material with approved tampers or compactors.

Compact each layer to at least 95.0 percent of maximum density. Determine the in-place density and moisture content according to AASHTO T 310 or other approved test procedures.

Surface Tolerance. If grade finishing stakes are required, finish the surface to within ±10 millimeters from staked line and grade elevation.

If grade finishing stakes are not required, shape the surface to the required template and check the surface with a 3-meter straightedge. Defective areas are surface deviations in excess of 13 millimeters in 3 meters between any two contacts of the straightedge with the surface.

Correct defective areas by loosening the material, adding or removing material, reshaping, and compacting.

Extra Payment for Transportation. No extra payment for transportation of untreated aggregates will be considered.

Maintenance. Maintain the aggregate course to the correct line, grade, and cross-section by blading, watering, rolling, or any combination thereof until placement of the next course.

(a) **Aggregate gradation.** The upper and lower specification limits are equal to the calculated mean of all test results plus or minus the allowable deviations.

(b) **Plasticity index.** The upper and lower specification limits for surface courses are shown below

Measure aggregate by the cubic meter placed and compacted according with design geometry.

6.3 Payment

The accepted quantities will be paid at the contract price per unit of measurement for the pay items listed in the bid schedule. Payment will be full compensation for the work prescribed in this Section.

6.4 Subbase Course Aggregate

(a) General. Furnish hard, durable particles or fragments of crushed stone, crushed slag, or crushed gravel conforming the following:

(1) Los Angeles abrasion, AASHTO T 96 — 50 percent max.

(2) Sodium sulfate soundness loss (5 cycles), AASHTO T 104 — 12 percent max.

(3) Durability index (coarse), AASHTO T 210 — 35 min.

(4) Durability index (fine), AASHTO T 210 — 35 min.

(5) Fractured faces, ASTM D5821 — 50 percent min.

(6) Without organic matter and lumps or balls of clay

Liquid limit, AASHTO T 89 — 25 max

Target Value Ranges (Granulometry) for Subbase (crushed stone)

Sieve Size	Percent by Mass Passing Designated Sieve (AASHTO T 27 and T 11)				
	Grading Designation				
	A (Subbase)	B (Subbase)	C (Base)	D (Base)	E (Base)
63 mm	100(1)				
50 mm	97 – 100(1)	100(1)	100(1)		
37.5 mm		97 – 100(1)			
25 mm	65 – 79 (6)		80 – 100 (6)	100(1)	
19 mm			64 – 94 (6)	86 – 100 (6)	100(1)
12.5 mm	45 – 59 (7)				
9.5 mm			40 – 69 (6)	51 – 82 (6)	62 – 90 (6)
4.75 mm	28 – 42 (6)	40 – 60 (8)	31 – 54 (6)	36 – 64 (6)	36 – 74 (6)
425 µm	9 – 17 (4)			12 – 26 (4)	12 – 26 (4)
75 µm	4.0 – 8.0 (3)	4.0 – 12.0 (4)	4.0 –7.0 (3)	4.0 –7.0 (3)	4.0 –7.0 (3)

(1)Statistical procedures do not apply.

6.5 Sampling, Testing and Acceptance Requirements

The reqiuirements for sampling, testing and acceptance are shown in the tables below:

Sampling, Testing, and Acceptance Requirements

Material or Product (Subsection)	Type of Acceptance (Subsection)	Characteristic	Category	Test Methods Specifications	Sampling Frequency	Point of Sampling	Split Sample	Reporting Time	Remarks
Aggregate Source									
Aggregate quality	Measured and tested for conformance	LA abrasion (coarse)	–	AASHTO T 96	1 per type & source of material	Source of material	Yes	Before using in work	Not required when using Governmentprovided sources
		Sodium sulfate soundness loss (coarse & fine)	–	AASHTO T 104	"	"	"	"	"
		Fractured faces	–	ASTM D5821	"	"	"	"	"
		Liquid limit	–	AASHTO R58 & T 89	"	"	"	"	"

Material or Product (Subsection)	Type of Acceptance (Subsection)	Characteristic	Category	Test Methods Specifications	Sampling Frequency	Point of Sampling	Split Sample	Reporting Time	Remarks
Aggregate Source (continued)									
Production									
Subbase course Grading A & B	Statistical	Gradation No. 4 (4.75 mm) No. 200 (75µm) Other specified sieves	 I I II	AASHTO T 27 & T 11	1 per 900 metric tons	From windrow or roadbed after processing	Yes	4 hours	–

Material or Product (Subsection)	Type of Acceptance (Subsection)	Characteristic	Category	Test Methods Specifications	Sampling Frequency	Point of Sampling	Split Sample	Reporting Time	Remarks

				Production (continued)					
Subbase & base course	Measured and tested for	Liquid limit	–	AASHTO	1 per	From windrow or roadbed	Yes	4 hours	–
Grading A,	conformance	Moisture- density	–	R 58 & T 89	900 metric ton	after processing Stockpile or production output	"	"	–
B, C,	(106.04)	(max density)		AASHTO	1 per type &				
D & E				T 180,	source of material				
				Method D [1]					
				AASHTO	1 per	In-place, after		End	
		Density	–	T 310 or	450 metric tons	compaction	No	of shift	–
				other approved procedures					
		Moisture content	–	"	"	"	"	"	–
		(in-place)							

Material or Product (Subsection)	Type of Acceptance (Subsection)	Characteristic	Category	Test Methods Specifications	Sampling Frequency	Point of Sampling	Split Sample	Reporting Time	Remarks
Surface course aggregate	Statistical (106.05)	Gradation		AASHTO T 27 & T 11	1 per 900 metric tons	From windrow or roadbed after processing	Yes	4 hours	–
		No. 4 (4.75 mm)	I						
		No. 40 (4.75 µm)	I						
		No. 200 (75 µm)	I						
		Other specified sieves	II						
		Plasticity index	I	AASHTO R 58, T 89, & T 90	"	"	"	"	–
	Measured and tested for conformance (106.04)	Moisture- density (max density)	–	AASHTO T 180, Method D (1)	1 per type & source of material	Stockpile or production output	Yes	"	–
		Density	–	AASHTO T 310 or other approved procedures	1 per 450 metric tons	In-place, after compaction	No	End of shift	–
		Moisture content (in-place)	–	"	"	"	"	"	–
		Fractured faces	–	ASTM D5821	1 per 900 metric tons	From windrow on roadbed after processing	Yes	4 hours	–

7. BASE COURSE LAYRES

7.1 GENERAL INFORMATION

This chapter deals with the minimum quality requirements for materials, products and works used in placing of base course. The GTR are written in a manner to constitute an integral part of a contract, having the conditions relevant to special works included in the contract as Special technical conditions (STC).

Materials. products, equipment and works shall be in accordance with standards and technical requirements stated in the design documentation. If no standard is stated, the application of respective EU standard is compulsory. If, in the meantime, a standard or regulation becomes non valid, the replacing standard or regulation shall be applicable.

The Contractor may propose the application of accepted technical regulations (standards) of an international standardizing body (ISO, ES, DIN, ASTM,…) with a written explanation and approval of the Supervising Engineer. This change shall be approved by the Supervising Engineer with the consent of the designer. The Contractor shall enter the change into the implementation design.

7.1.1 DEFINITIONS

General terms and expressions and their meaning in these General Technical Requirements are given in chapter 0. Only definitions which are not given in chapter 0 are given below, and these are relevant only for this chapter.

7.2 GENERAL TERMS

Asphalt by hot procedure is asphalt obtained by mixing of hot bitumen and hot stone material.

Asphalt by cold procedure is asphalt obtained by mixing of bitumen emulsion or cut-back bitumen into stone material.

BBC is a bituminous base course made of asphalt mixture with the largest nominal grain size 16,22 or 32 mm, made according to the principle of the most dense grain packing, used for execution of pavement structure asphalt base courses.

BBWC is a bituminous base – wearing course made of asphalt mixture with the largest nominal grain size 16 or 22 mm, made according to the principle of the most dense grain packing, used for execution of single-layer asphalt structures.

Stabilizing mixture consistency is a quality parameter determined on testing samples as a mono-axial consistency after 7 and 28 days.

Modulus of compressibility expresses the amount of compressibility of the tested material under determined pressure and determined conditions. It is defined by the use of a circular plate diameter 300 mm according to the EN standard.

Base course of granular stone material without binder as part of the pavement structure is, as a rule, placed between the sub-grade and the binding base course (cement stabilization, BBC). This layer is incorporated into the pavement structure of roads of all traffic load groups. It is made of loose granular stone material, mechanically stabilized by compaction. Types of material are specified, requirements on their quality and placeability, as well as quality requirements of the placed base course.

Placed base course of mechanically compacted granular stone material, according to the grain composition, thickness and position shall be in accordance with the design, i.e. the General Technical Requirements (GTR). Base course without binder is made of a mixture of uncrushed and/or crushed granular stone material. Main quality characteristic of this layer is the compaction (bearing capacity) expressed by the degree of compaction and the modulus of compressibility.

Base course of granular stone material stabilized (bonded) with hydraulic binder, as part of a pavement structure is, as a rule, incorporated between the base course of granular stone material without binder and bitumen treated base course of highways and roads with very heavy and heavy traffic load.

Bonded base course is made of material described in these GTR. Types of material are specified as well as their quality and placeability requirements, and the quality requirements of placed base course. The placed base course of granular stone material stabilized by hydraulic binder, in a mixture of basic granular stone material, a mixture of basic binding material and water, according to thickness and position shall be in accordance with the design, i.e. the GTR. Base course stabilized by hydraulic binder is a mixture of stone material of a determined granular size, hydraulic binder and water. The main characteristic of quality of this layer is the consistency (bearing capacity), expressed by the compressive strength and the degree of compaction.

Trial section is a part of the road under construction where the capability of the contractors is tested to execute each asphalt course of the pavement structure according to the quality requirements specified by these GTR.

Initial job mix formula of asphalt mixture is a laboratory proof that it is possible to reach the required quality of asphalt mixture with specific chosen materials and chosen composition.

Confirmed job mix formula of asphalt mixture is proof that it is possible to produce on certain asphalt production plants an asphalt mixture of quality reached by initial job mix formula.

Stabilizing mixture is composed of granular stone material of determined grain size, hydraulic binder of determined class, in exactly proportioned quantity and an optimal amount of water necessary for the hydration of hydraulic binder and coating of grains, and is determined by initial job mix formula..

Rate of compaction is the ratio between dry mass of placed layer defined according to standard EN and the maximum dry mass defined by the modified Proctor procedure according to standard EN or ASTM, expressed as percentage.

Compressive strength is the ratio between single-axial load and the testing sample surface area influenced by the load, with free lateral expansion, according to the standard EN.

Rolled asphalt is asphalt made by hot procedure, compacted by rolling during placing.

7.2.1 MATERIALS

Bitumen is a black, sticky, at normal temperature semisolid or solid mass, composed of hydrocarbons and their non-metallic derivatives, soluble in toluen, found in nature or obtained by petroleum processing. Bitumen has the role of binder in asphalt mixtures.

Bitumen emulsion is a dispersive bitumen agent, dispersed in water, containing an emulsifying agent.

Road construction bitumen is used in production of asphalt mixture, obtained from the surplus of vacuum distilled oil.

Crushed gravel contains more than 90% of crushed grains, i.e. grains with more that 50% of crushed surface area. It can be in the form of non-separated crushed gravel or partially separated crushed gravel.

Crushed stone material is a partially separated mixture of crushed stone grains, grain size ranging from 0 mm to largest grain size diameter, i.e. to the nominal grade size.

Partially separated granular stone material is a non-crushed (gravel, scree) or granular stone material obtained by crushing of stone, gravel or scree, of nominal grain size between 0 and 32 mm, separated and declared according to the highest nominal grain size.

Crushed stone grit is a granular material, grain size ranging from 2 to 32 mm, obtained by crushing of stone, gravel or scree and separated in accordance with the standard ARDM or ASTM. Stone grit obtained by crushing of gravel shall contain at least 90% (m/m) of crushed gravel grains (crushed grains are those grains having at least 50% of surface crushed), and it can contain at the most 2% of completely non-crushed grains.

Crushed sand is a granular stone material, grain size ranging from 0 to 2 mm or from 0 to 4 mm, obtained by crushing of stone, gravel or scree.

Industrial by-products, e.g. blast furnace slag or similar, are non-separated granular materials. Their volume and grain size distribution shall be stable under the influence of atmospheric agents. Physical and mechanical properties shall be in accordance with requirements for stone materials.

Stone is a part of a rock, separated by natural forces or by means of planned efficient mechanical influence. Rock (rock mass) is a component part of the Earth's crust, of specific texture, structure, mineral composition and means of geologic occurrence. Genetically, rocks are classified as igneous rocks, sedimentary rocks and metamorphic rocks.

Stone grit (stone aggregate) is a granular material, grain size composition ranging from 2 to 32 mm and separated according to basic fractions or inter- fractions, according to the requirements of standard EN orARDM.

Rock flour is a crushed or ground granular stone material, grain size up to 0,71 mm. It shall contain at least 80% (m/m), i.e. 65% (m/m) of filler, depending on the quality of rock flour, according to the EN standard.

Non-crushed stone grit is a naturally pulverized granular stone material, gravel or scree, grain size composition ranging from 2 to 32 mm, separated according to the ARDM or ASTM.

Non-separated crushed stone material is a mixture of crushed stone, with grading ranging from 0 to the maximum nominal grain size (expressed in mm).

Natural gravel is a non-separated, loose sediment mostly consisting of rounded conglomerate, size ranging from 2 mm to 63 mm, i.e. particles from 0 mm to the largest grain diameter – nominal grain size. If natural gravel contains grains larger than 63 mm, it is necessary to screen the material.

Natural scree is a naturally pulverized, non-separated and loose stone material, originating on the site or after a very short shifting, (mainly gravitational), with not rounded grains larger than 2 mm, i.e. particles ranging from 0 mm to the largest grain diameter. If the scree contains grains larger than 63 mm, it is necessary to screen it.

Natural sand is a loose, clastic sediment, grain size composition ranging from 0,02 mm to 2 mm.

Polymer modified bitumen emulsion is a dispersive type of polymer modified bitumen or latex dispersed in water, containing an emulsifying agent.

Polymer modified bitumen (PmB) is a mixture of road construction bitumen and different types of polymer (elastomers, duromers, tarpolymers).

Filler is a part of stone flour, grain size composition up to 0,09 mm.

Cut-back bitumen is bitumen subsequently diluted by appropriate oils.

Separated crushed stone material is a crushed stone material, separated on at least three fractions or separated according to the EN standard.

Separated granular stone material is a non-crushed stone material (gravel, scree) or granular material obtained by crushing of stone, gravel or scree, smallest grain size 2 mm to the largest grain size 32 mm, not separated according to the EN standard, but separated on some other fractions declared according to the smallest and largest nominal grain size.

Scree is a pulverized, non-rounded, loose stone material obtained by natural wear of rocks (in situ) or after a very short “shift” mainly gravitational, with grain size composition larger that 2 mm.

Gravel is a loose clastic sediment mostly consisting of rounded conglomerate, size ranging from 2 mm to 63 mm. It can be separated, partially separated or separated according to the ARDM or ASTM standard

Granular stone material is a granulated stone material, grain size composition ranging from 0 to the largest nominal size (expressed in mm), not ground (gravel, sand) or obtained by grinding of rock, gravel or scree.

7.3 GRANULAR STONE MATERIAL BASE COURSE

7.3.1 QUALITY CONTROL

Type of material

In order to execute this base course, materials given in sub-item 6.1 shall be used.

7.3.2 MATERIAL SAMPLING

Materials are sampled in accordance with the EN standard.

7.3.3 LABORATORY TESTING

The following properties of granular stone material shall be tested in the laboratory.

- grain size distribution according to the ARDM standard
- density according to the ARMD or ASTM standard
- moisture content according to the ARMD or ASTM standard
- volume mass and water absorption according to the ARMD or ASTM standard
- grain shape of stone aggregates according to the ARMD or ASTM standard
- determining the weak grains according to the ARMD or ASTM standard
- frost stability by means of sodium sulfate, according to the ARMD or ASTM standard
- Natural and ground aggregate resistance to grinding and wearing by means of the “Los Angeles” method according to the ARMD or ASTM standard
- approximate determination of organic substances pollution according to the ARMD or ASTM
- Determination of combustible and organic matter according to the ARMD or ASTM standard
- Determination of light-weight particles according to the ARMD or ASTM standard
- Optimal water content according to the ARMD or ASTM standard
- The California bearing capacity index according to the ARMD or ASTM standard
- mineral-petrographic composition according to the ARMD or ASTM standard

7.3.4 QUALITY REQUIREMENTS FOR GRANULAR STONE MATERIALS

Quality control of granular stone material shall be done in an authorized laboratory.

7.3.5 GRAIN SIZE DISTRIBUTION

The grain size distribution curve (grading curve) of stone material shall be within the limits defined in the table 13.

Apart from the requirement given in table below, granular stone material shall also satisfy the following grain size distribution requirements:

- **content of grains smaller than 0,02 mm** shall not be greater than 13%
- **the largest grain diameter** shall not be greater that half of the layer thickness, i.e. 63 mm at the most, and
- **degree of unevenness,** as a measure of good material placeability,

shall be:

$U = \frac{d60}{d10}$ from 15 to 100 for gravel**,** and

$U = \frac{d60}{d10}$ from 15 to 50 for granular stone material**,**

with:

d_{60} – grain diameter with 60% mass,
d_{10} – grain diameter with 10% mass .

Note: In some instances granular material with somewhat different composition shall be allowed, if other tests prove their placeability, and with the approval of the Supervising Engineer.

Screen opening (square shaped) [mm]	Percent passing [%]
0,1	2-15
0,2	3-20
0,5	7-28
1	13-38
2	20-48
4	29-60
8	40-75
16	54-90
31,5	73-100
50	90
63	100

Table 21 - Grain size distribution limit values of granular stone material for base course without binder

Percentage of grains smaller than 0,02 mm can be greater than 3% (not greater than 5%), if they are particles of rock origin, in areas of less freezing depths (moderate climatic conditions).

Quality of material shall guarantee the requested pavement bearing capacity during the complete designed operating life.

7.3.6 DETERMINATION OF ORGANIC SUBSTANCES

A sample is immersed in a solution containing reagent, where, after a certain time period, the solution color above the sample is compared with the standard solution color. If the solution color above the sample is darker than the standard

one, percentage of organic mater and light-weight particles in the sample is gravimetrically determined.

7.3.7 PERCENTAGE OF ORGANIC MATTER AND LIGHT-WEIGHT PARTICLES

Granular material shall not contain more than 2% of organic matter and light- weight particles, e.g. wooden particles, roots, coal particles etc.

7.3.8 OPTIMAL MOISTURE AND MAXIMUM DRY VOLUME MASS

A sample of granular stone material is compacted by modified Proctor's procedure (2,66 MN m/m^3). Test result is the optimal moisture, i.e. the amount of water in the sample that enables maximum compactness of material with the applied energy, thus obtaining maximum dry volume mass. Incorporation of granular material into the base course is best under optimal moisture.

Maximum dry volume mass according to the modified Proctor's procedure depends on the mineral-petrographic composition of material and its grain size distribution, and is used as a parameter while determining the degree of compaction of placed layer.

7.3.9 CALIFORNIA BEARING RATIO – CBR

Bearing capacity of a layer is evaluatedon the basis of laboratory determined California bearing capacity ratio test – CBR. The CBR is determined on samples compacted with optimal moisture content, according to the standard.

Bearing capacity requirements for granular stone material, expressed in the form of California bearing ratio - CBR are as follows:

- for natural gravel or gravel mixture with less than 50% of crushed stone material, at least 40%, and
- for crushed granular stone material or natural gravel mixture with more than 50% of granular stone material, at least 80%.

Properties	Defined requirement, maximum
Shape of grain – percentage of grains of unsuitable shape (3:1), [%]	40
Water absorption [%]	1,6
Friable, low quality grains, [%]	7
Resistance to freezing by Sodium sulfate. Mass loss after 5 cycles [%]	12
Resistance to grinding and wear according to the Los Angeles method [%]	45

Table 22 - Physical and mechanical properties of granular stone material for execution of base course without binder

7.3.10 PHYSICAL AND MECHANICAL PROPERTIES

Natural stone material and granular stone material shall conform to the requirements given in table 14 regarding the grain shape, water absorption, low quality particles, resistance to freezing and resistance to grinding and wear.

7.3.11 DOCUMENTS ON PREVIOUS MATERIAL TESTING

In accordance with table 13, the contractor or sub-contractor is issued a certificate on the suitability of granular stone material for execution of base course without binder, on the basis of quality control tests performed in an authorized laboratory.

The report on the suitability of material proves the capability of the contractor to produce adequate material for the execution of base course with the plant and equipment available to him.

Such report also proves that the already produced quantity of material satisfies the quality requirements.

If major change in the grain size distribution occurs in the sense of discrepancies from the limit values or the location, the party requesting the report shall obtain new documentation on the quality of the new material.

The report shall contain:

- General part with data on the ordering arty, place and date of sampling, origin and type of material, authorized laboratory performing the tests, requirements of the ordering - party and standards according to which the tests were performed.
- results of laboratory tests on the material properties given in GTR.,
- Conclusion with opinion on the suitability of granular material for execution of base course without binder.

The suitability tests are performed on a key sample. In the sampling process representatives of the authorized lab and the ordering party shall be present.

If a major change occurs in the properties of granular material due to the change of rock mass in the quarry or due to the production technology of granular stone material, and if a major change occurs in the grain size distribution of the sediment stone material, or a change of the field location, the ordering party shall obtain certificates on quality of new material and submit it to the Supervising Engineer.

The original report on material suitability is submitted to the Supervising Engineer and is valid one year at the most.

7.3.12 QUALITY REQUIREMENTS FOR PLACED BASE COURSE

Completed base course of granular stone material without binder shall satisfy requirements given in the design. If not otherwise stated, the modulus of compressibility requirements, degree of compaction, grain

size distribution, evenness of the layer surface, height and thickness as well as the position and the gradient of the layer shall be satisfied according to these GTR.

7.3.13 MODULUS OF COMPRESSIBILITY AND THE DEGREE OF COMPACTION

The following properties are tested on a placed course of granular stone material, after the geodetic approval regarding the height and position:

- Modulus of compressibility by means of the circular plate method, according to the ARDM and ASTM
- Degree of compaction by testing the volume mass according to the ARMD and ASTM.

Modulus of compressibility and the degree of compaction of the base course without binder, as defined in GTR, shall satisfy the requirements given in table 15

Layers to be placed on the base course of mechanically compacted granular stone material	Requested requirements minimum	
	Modulus of compressibility Ms [MN/m^2]	Degree of compaction Sz [%]
Bituminous asphalt surfacing, bituminous base course and base course stabilized by hydraulic binder total thickness ⍰ 40 cm	50	95
Bituminous asphalt surfacing and bituminous base course total thickness ⍰ 15 cm or bituminous asphalt surfacing, bituminous base course and base course stabilized by hydraulic binder thickness from 30 cm to 40 cm	80	98
Bituminous asphalt surfacing and bituminous base course total thickness ⍰ 15 cm	100	100

Table 23 - Requirements for granular stone material base course without binder

7.3.14 GRAIN SIZE DISTRIBUTION

The material grain size distribution shall satisfy the requirements given in in the GTR, sampled at the placing site prior to compacting.

7.3.15 COURSE SURFACE EVENNESS

The course surface evenness is measured as the course surface deviation from a staff length 4 m. Deviation from the staff can be 20 mm maximum.

7.3.16 HEIGHT AND POSITION

Elevation position of the placed course is checked by geodetic survey at points under the pavement edges, and the pavement centerline, deviations can be maximum ± 15 mm.

7.3.17 GRADIENT

As a rule, the gradient shall be equal to the longitudinal and transverse gradient of the designed surface. Deviations shall not be greater than ± 0,4% from the gradient defined by the design.

7.3.18 Production of granular stone material

Granular stone material for execution of mechanically compacted base course is produced by grinding of a rock mass obtained by blasting, or by crushing of larger size gravel boulders in the crushing plant.

Natural gravel or natural detribus for base course execution is obtained by sifting out of upper fractions which can be crushed to respective grain size.

If the produced or natural stone material lacks particles of specific size, the grain size distribution can be corrected by adding granular stone material of specific fractions. The stone material mixture shall be well homogenized.

7.3.19 TRANSPORT OF GRANULAR STONE MATERIAL

Produced or natural granular stone material is transported to the place of deposition with suitable transport vehicles.

7.3.20 PLACING OF GRANULAR STONE MATERIAL

Mechanically compacted granular stone material base course, as part of the pavement structure is, as a rule, placed between the sub-grade and the coherent base course (cement stabilization, BBC).During the rehabilitation of existing roads a base course is sometimes placed on the existing asphalt base serving as a leveling course, on which other courses of the pavement structure are placed.

7.3.21 REQUIREMENTS FOR THE SUB-GRADE

Granular stone material base course can be placed when the supervising engineer takes over the sub-grade and gives the go-ahead for the start of works. The Supervising Engineer shall check the following: evenness, designed gradient, correctly executed drainage, position and required quality requirements.

The Contractor shall keep the sub-grade in the condition prevailing at the time of taking over from the Supervising Engineer. If the sub-grade is damaged for whatever reason, the Contractor shall repair it to the level of requested requirements and submit proof to the Supervising Engineer.

7.3.22 WEATHER CONDITIONS

The base course shall not be placed on a frozen sub-grade and it shall not be executed with frozen material. Also, after abundant rain or snow melting, the process of compaction shall be delayed until surplus water runs off.

7.3.23 PLACING OF BASE COURSE

Granular stone material base course shall be placed on a prepared sub-grade by transporting the granular stone material, spreading it with finishers and compacting.

In both cases a certain amount of material is spread with a banking which, after compaction, gives a layer with designed thickness, which is determined on a trial section.

Care shall be taken during placing to avoid segregation of granular material. If this occurs, places of segregation shall be replaced with homogenous material. Prior and during compaction, moisture of material shall be regulated to reach the optimal moisture defined according to the EN standard.

The process of compaction starts after the completed planning and slope staking process.

Compaction shall be done with vibrating machines: plate vibrator, compactors, vibratory rollers or pneumatic-tyred rollers, combined roller with pneumatic or metal tyres, individually or combined.

After spreading of material, compaction shall be done carefully over the complete layer surface. Rollers and / or compacting machinery shall move at a constant speed from 2,5 km/h to 4 km/h. Special attention shall be given to good compaction of the layer. The layer surface shall be well closed, even – of mosaic appearance.

All places not reachable by compacting machinery, shall be compacted by other means in accordance with the requirements. Such places, as well as the means of work execution shall be approved by the Supervising Engineer at the recommendation of the Contractor.

All requirements for the placed course shall be fulfilled before the placing of the next course. Compacting process shall be repeated if freezing, abundant rains, damage due to site traffic or additional works occurred on the existing base course during the period from its placement and the placement of the following pavement structure course.

7.3.24 QUALITY ASSURANCE OF MATERIAL AND WORKS

Quality assurance of the granular stone material base course without binder means several procedures described and defined in the GTR, with the aim of obtaining an adequate pavement structure base course.

Two types of activities are given:

- activities prior to the execution of granular stone material base course without binder, and
- testing during the placing procedure of granular stone material base course without binder.

7.3.25 PROCEDURE PRIOR TO THE PLACING OF GRANULAR STONE MATERIAL BASE COURSE WITHOUT BINDER

These are:

- preliminary material testing with appraisal, and
- definition of the placing method on the trial section.

All the mentioned activities are the responsibility of the Contractor, they shall be done on time, prior to the start of work execution, at the Contractor's expense.

The Contractor shall submit the results of the preliminary tests to the Supervising Engineer for approval.

7.3.26 PRELIMINARY MATERIAL TESTING WITH APPRAISAL

Preliminary testing of material serves as proof of usability of this material for base course execution, and is done in accordance with sub-item of the GTR.

Preliminary testing results, on the basis of which the suitability appraisal is given, are submitted to the Supervising Engineer in the form of a report on the suitability of material for execution of base course of granular stone material without binder, in original.

The report consists of the following:

- General part with the information of the ordering party, place and date of sampling, origin and type of material, authorized laboratory where the testing is performed, requirements of the ordering party and the standards according to which the testing was performed,
- results of laboratory tests on the material properties given in the GTR
- conclusion with the opinion on suitability of granular stone material for execution of base course without binder.

7.3.27 DEFINITION OF THE PLACING METHOD ON THE TRIAL SECTION

Trial section serves as proof that a pavement base course can be executed with granular stone material and respective placing methods of quality defined in the design or the GTR.

Prior to the transport of material to be used, the Contractor shall submit to the Supervising Engineer the report of granular stone material for execution of base course, on the basis of which the Supervising Engineer approves the execution of the trial section.

Part of the road to be used as trial section shall be defined by the Supervising Engineer on suggestion of the Contractor.

The number of passes of machinery and the type of compacting machinery is determined on the trial section in order to reach the defined quality parameters. Quality of placed course on the trial section is tested according to the following:

- height, position and gradient by geodetic survey
- modulus of compressibility (by means of a circular plate diam. 300 mm) [MN/m^2].
- degree of compaction [%],

- surface evenness [mm], and
- course thickness [cm].

The tests shall be done by the Supervising Engineer at the expense of the Contractor.

When the method of work of the vibrating machines are determined on the trial section, by which the required course quality is reached, the Supervising Engineer shall approve the placing of that particular course.

If a positive experience with granular stone material and the efficiency of vibrating machines exists a trial section is not needed.

7.3.28 TESTING DURING PLACING OF GRANULAR STONE MATERIAL BASE COURSE WITHOUT BINDER

Tests to be performed during the placing of granular stone material base course without binder are:

- control testing, and
- audit testing
-

7.3.29 CONTROL TESTING

Control testing shall be done by the Contractor and its authorized laboratory, or, if he does not have one, by any other authorized laboratory. These tests are used for quality appraisal of the placed course, and on the basis of these, audit testing shall be performed.

Control control includes:

- modulus of compressibility control by means of circular plate diam. 300 mm at every 500 m^2, or
- degree of compaction by volume- meter in relation to the maximum compactness according to the modified Proctor's method, at every 500 m^2 at least, or
- nuclear moisture density meter at every 500 m^2, or
- modulus of compressibility by means of circular plate diam. 300 mm and the degree of compaction by volume-meter in relation to the maximum compactness according to the modified Proctor's method, at every 1000 m^2 at least,
- grade size distribution, at every 3000 m^2 at least,
- control of the evenness of the course surface by means of a staff length 4 m at every cross section or according to the Supervising Engineer's requirements, and
- control of the course according to height, position and gradient by geodetic survey.

Immediately upon the completed control control, the Contractor shall submit the control results, in written form, to the Supervising Engineer.

Upon the completion of works, control control results are presented in a written report, including the following:

- general part with information on the Client, Contractor, structure and the used stone material
- information on the scope of control control according to the GTR (control program)
- control control results and the standards according to which the tests were done, and

- conclusion on the quality of executed works.

7.3.30 AUDIT TESTING

Audit testing of the base course shall be done by the Client, through an authorized laboratory, and, together with the control control, shall be proof of the quality of the pavement structure course. Audit testing shall be done upon completed control control and the quality assurance of the course concerning the compactness, evenness, height, position and gradient.

One audit testing shall be done per two control controls.

Upon the completion of works, audit testing results are presented in a written report, including the following:

- general part with information on the Client, Contractor, structure and the used stone material
- information on the scope of audit testing according to the GTR (control program)
- data on the completed scope of audit testing,
- audit testing results and the standards according to which the tests were done,
- Conclusion on the quality of executed works on the basis of control testing and audit testing,
- control of the course according to height and position by geodetic survey.

On the basis of the control testing and audit testing results, the Client, i.e. his Supervising Engineer shall make the final evaluation of the course quality.

7.3.31 TAKING OVER OF THE PLACED COURSE

The placed base course of granular stone material without binder shall be taken over by the Supervising Engineer on the basis of the fulfilled requirements from these GTR.

All possible faults according to those requirements shell be solved by the Contractor at his expense, including all additional testing and measurements which need to be performed in order to confirm the quality of the betterment.

If the base course is damaged after the taking over as a result of unfavorable weather conditions or any other reason, the course shall be repaired and its quality confirmed prior to the placing of the following pavement structure layer.

7.3.32 DOCUMENTS PROVING THE QUALITY

- Report on material suitability
- Report on control testing,
- Report on audit testing,
- Report on audit testing of the course by geodetic survey,
- Report of the Supervising Engineer on the executed works.

7.3.33 CALCULATION OF WORK

This work is measured and calculated in cubic meters of placed material in compacted state.

The designed measurements shall be taken as basis for calculation, if no changes were done by the Supervising Engineer.

The payment shall be done according to the contracted unit price for cubic mater of placed layer in compacted state including all costs of supply, transport, placement of material as well as all other works needed for completion.

7.4 BITUMEN TACK COAT FOR BINDING THE BITUMEN BASE COURSE WITH THE LAYER MADE ON THE BASIS OF HYDRAULIC BINDERS

7.4.1 DESCRIPTION

Bitumen tack coat for binding the bitumen base course and the layer made on the basis of hydraulic binders is a thin layer of bitumen from bitumen emulsion obtained by sprinkling. It is placed as a part of preparation of bedding for execution of pavement structure bitumen base course.

7.4.2 QUALITY REQUIREMENTS OF BITUMEN EMULSION

Course placed on the basis of hydraulic binders is sprinkled by medium breaking anion and cationic emulsion, depending on the weather conditions.

Quality of bitumen emulsion shall satisfy requirements given in item 6-00.4 of these GTR.

7.4.3 WORK

Course made on the basis of hydraulic binders shall be sprayed by bitumen emulsion in the quantity of 0,5 kg/m^2 minimum, at least 24 hours prior to the placing of asphalt course.

Spaying by bitumen emulsion shall be done only by power sprayers which enable unified distribution of bitumen emulsion across the surface. Manual spraying shall not be allowed, except on places not accessible by power sprayers and with the approval of the Supervising Engineer.

Prior to spraying by bitumen emulsion, surface of the course made on the basis of hydraulic binders shall be clean, dry and naturally moist.

Spraying of the course made on the basis of hydraulic binders with bitumen emulsion shall not be allowed during rainfall, i.e. during relative air humidity greater than 75% and temperature of air and base lower than 5°C.

7.4.4 QUALITY CONTROL

Control testing

During the placing of bitumen course, the Contractor shall perform current control of bitumen emulsion in accordance with these GTR.

7.4.5 AUDIT TESTING

During the placing of bituminous course audit testing of bitumen emulsion shall be performed in accordance with these GTR.

7.4.6 CALCULATION OF WORK

Spraying of course made on the basis of hydraulic binders with bitumen emulsion is measured in square meters of actual sprayed surface, in accordance with the design details and is calculated in square meters of sprayed surface area.

The price includes all costs of material supply, transport, equipment and all other needed for execution of work.

7.5 BITUMEN BASE COURSE (BBC)

7.5.1 DESCRIPTION

Bitumen base course (BBC) is a base course of the pavement structure made of a mixture of stone flour, stone material largest nominal grain size 32 mm and bitumen as binder, produced and placed according to the hot procedure.

BBC is divided as follows:

- Nominal size of largest stone material grain
- Type of stone material, and
- Grain size distribution of the asphalt mixture stone compound.

BBC is divided according to the nominal size of largest stone material grain as follows:

- BBC 16
- BBC 22 and
- BBC 32.

According to the type of stone material, BBC is divided as follows:

BBC A - made on the basis of crushed stone grit with addition of stone flour,

BBC B - made on the basis of separated or partially separated crushed stone material, with a composition correction by addition of sand and/or stone flour (according to need), or separated natural loose stone material with addition of at least 3% (m/m) of stone compound, crushed grains size larger than 4 mm and / or stone flour (according to need), and

BBC C - made on the basis of separated natural loose stone material, with a composition correction by addition of sand and/or stone flour (according to need).

Traffic load group	Type of BBC	Technological thickness of placed layer, mm
Highways, very heavy, heavy	BBC 22A	60 to 80
	BBC 32A	80 to 120
Medium	BBC 16A BBC 16B BBC 22A BBC 22B	45 to 60 60 to 80
	BBC 32A BBC 32B	80 to 120
Light and very light	BBC 16A BBC 16B BBC 16C	45 to 60

Table 24 - Application and thickness of placed BBC in relation to the traffic load group

According to the grain size distribution of stone compound, BBC is divided as follows:

BBC 22, - wider limit values of stone compound grain size distribution,
BNS 22s, - narrower limit values of stone compound grain size distribution,
BNS 32, - wider limit values of stone compound grain size distribution, and
BNS 32s, - narrower limit values of stone compound grain size distribution.

7.5.2 QUALITY REQUIREMENTS OF COMPONENT MATERIALS

Stone grit

Stone grit shall satisfy quality requirements of these GTR.

Traffic load group			
Highway and very heavy	Heavy	Medium	Light and very light
KS-S-I KS-S-V	KS-S-I KS-S-II KS-S-V	KS-S-I KS-S-II KS-S-III KS-S-V KS-S-VI KS-S-VIII	KS-S-I do KS-S-X

Table 25 - Application of quality category of stone grit for BBC in relation to the traffic load group

7.5.3 SEPARATED AND PARTIALLY SEPARATED GRANULAR STONE MATERIAL

Separated and partially separated granular stone material shall satisfy the quality requirements of these GTR.

Traffic load group			
Highway and very heavy	Heavy	Medium	Light and very light

Not applicable	KM-I	KM-I KM-II	KM-I KM-II KM-III KM-IV

Table 26 - Application of quality category of separated and partially separated granular stone material for BBC in relation to the traffic load group

7.5.4 SAND

Natural and crushed sand shall satisfy the quality requirements of these GTR.

Traffic load group			
Highway and very heavy	Heavy	Medium	Light and very light
All categories of crushed sand of sediment origin	All categories of crushed sand of sediment origin	All categories of crushed sand of sediment origin and mixture of crushed and natural sand up to the ratio of at least 1:1	All categories of crushed sand of sediment origin and all categories of natural sand

Table 27 - Application of quality category of sand for BBC in relation to the traffic load group

7.5.5 BITUMEN BINDER

While choosing the type of bitumen, care shall be taken about the climatic zones, according to standard, as well as about the exploitation conditions.

Type of bitumen	Traffic load group			
According to EN 12591:1999	Highways and very heavy	Heavy	Medium	Light and very light
35/50	+	+	-	-
50/70	+	+	+	+
70/100	+	+	+	+

Table 28 - Use of bitumen in relation to the traffic load group

Road construction bitumen shall satisfy the quality requirements set in these GTR.

In special circumstances polymer modified bitumen or road construction bitumen shall be used for BBC, with addition of natural bitumen or polymer additives, applied in the asphalt mixture production process itself, on the asphalt mixing plant.

Polymer modified bitumen (PmB) shall satisfy the quality requirements of these GTR.

7.5.6 BBC QUALITY REQUIREMENTS

Asphalt mixture composition

Screen opening size (mm)	BBC 16	BBC 22	BBC 22s	BBC 32	BBC 32s
	Passage through screen, %				
0,09	5 to 12	4 to 14	5 to 11	3 to 12	4 to 10
0,25	9 to 30	7 to 37	8 to 17	5 to 18	7 to 15
0,71	15 to 40	12 to 53	13 to 27	9 to 27	12 to 23
2,0	26 to 55	21 to 65	24 to 40	17 to 40	20 to 35
4,0	38 to 70	30 to 74	34 to 53	24 to 52	29 to 46
8,0	58 to 88	44 to 85	50 to 70	34 to 68	41 to 62
11,2	74 to 98	54 to 92	61 to 81	42 to 78	50 to 71
16,0	95 to 100	70 to 100	75 to 94	53 to 90	61 to 82
22,4	100	97 to 100	97 to 100	70 to 100	76 to 94
31,5		100	100	97 to 100	97 to 100
45,0				100	100

Table 29 - Scope of stone compound grain size distribution for BBC

Type of BBC	Provisional proportion of bitumen % (*m/m*)
BBC 16	4,3 to 5,7
BBC 22	3,8 to 5,2
BBC 22s	4,0 to 5,0
BBC 32	3,3 to 4,7
BBC 32s	3,5 to 4,5

Table 30 - Provisional proportion of bitumen in asphalt mixture for BBC

The exact proportion of bitumen is determined by the production of previous and working composition of asphalt mixture.

7.5.7 PROPERTIES OF ASPHALT MIXTURE

Property	Traffic load group		
	Highway and very heavy	Heavy and medium	Light and very light
Stability at 60 °C, at least, kN	9	7	4
Relation of stability and deformation at 60 °C, at least, kN/mm	2,5	2	1,5
Voids, %(*V/V*)	5 to 8	4 to 8	3 to 8
Filling of stone compound voids with bitumen, %	51 to 67	52 to 73	to 77

Table 31 - Physical and mechanical properties of asphalt mixture for BBC in relation to the traffic load group

7.5.8 PROPERTIES OF PLACED COURSE

	Traffic load group

Properties	Highway and very heavy	Heavy and medium	Light and very light
Percentage of gravel % (V/V)	4 to 10	3 to 10	2 to 11
Rate of compactness, minimum, %	98	98	97
Thickness of course - separately, maximum - mean values, maximum, %	 - 15 % from designed, but not more than -15 mm - 5 from designed		
Bonding of layers, minimum, N/mm^2	1,0* *		

Table 32 - Percentage of voids, rate of compactness, thickness and bonding of layers executed by BBC in relation to the traffic load group

* Thickness greater than 20 % from the designed shall not be considered in the mean thickness calculation.

** Applicable only when the base is sprayed with bitumen binder.

Property	Traffic load group			
	Highway	Heavy and very heavy	Mediu m	Light and very light
Evenness - IRI($_{100}$) , maximum, m/km	1,8	2,2	2,5	3,0
- measuring staff 3 m, maximum, mm	6	8	10	12
Elevation: allowed elevation deviation from designed elevation position, maximum %	10	10	20	20
cross fall: Allowed deviation from the designed cross-fall (each profile), maximum, % (aps.)	0,4	0,4	0,4 %	0,4
Position: Allowed deviation (horizontal position of left and right edge) from the designed elevation position, maximum, mm	25	25	50	50

Table 33 - Evenness, elevation, cross-fall and horizontal position of the placed BBC in relation to the traffic load group

7.5.9 EXECUTION OF BBC

Production, transport and placing of BBC are described in these GTR.

7.5.10 QUALITY CONTROL OF BBC

Preliminary testing

Activities prior to initiation of asphalt works, with respect to previous material usability tests, production of initial and confirmed job mix formulas and the trial section, shall be done in accordance with these GTR.

7.5.11 CONTROL TESTING

Control testing of component materials

Control testing of component materials is done in accordance with these GTR.

Control testing of produced asphalt mixture

Samples of asphalt mixture are taken at the production plant or at the placing site.

Asphalt mixture composition is tested by at least one sample at every 500 tons of produced asphalt mixture.

Physical and mechanical properties of asphalt mixture are tested by at least one sample at every 1000 tons of produced asphalt mixture.

7.5.12 AUDIT TESTING OF PRODUCED ASPHALT MIXTURE

Samples of asphalt mixture for audit testing are usually taken at the site where the asphalt mixture is being placed.

Composition, physical and mechanical properties of asphalt mixture are tested:

- for highways and roads of heavy and very heavy traffic load group at every 2000 tons of produced asphalt mixture, and
- for roads of medium, light and very light traffic load at every 6000 m^2 of placed BBC.

7.5.13 AUDIT TESTING OF PLACED COURSE

Rate of compactness, proportion of gravel, thickness of executed course and bonding of the layers are tested on samples taken at every 2000 m^2 of surface of placed layer, according to of these GTR.

Evenness of the placed course is tested in accordance with these GTR.

Elevation, cross-fall and position of placed course are tested with appropriate equipment which checks at least 20% of data taken by the Contractor during control testing of asphalt mixture placing, according to these GTR.

7.5.14 QUALITY EVALUATION OF THE PLACED BBC

The placed BBC shall be evaluated and taken over by the Supervising Engineer on the basis of the control test and audit test results.

Percentage of bitumen, defined on asphalt mixture samples during control testing and audit testing shall satisfy the requirements

Grain size distribution of stone compound, defined on asphalt mixture samples during control testing and audit testing shall satisfy the requirements

Physical and mechanical properties of asphalt mixture shall satisfy the requirements given

Properties of placed asphalt course shall satisfy the requirements given

All faults found according to the given requirements shall be solved by the Contractor.

All costs of rehabilitation shall be at the expense of the Contractor, including all additional testing and measuring necessary to prove the validity of the improvement.

All works that do not satisfy the set quality requirements and which are not remedied by the Contractor according to the Supervising engineer's request, shall not be paid to the Contractor.

7.5.15 CALCULATION OF WORK

The quantity of performed work shall be measured in square meters of upper surface of actually placed and incorporated BBC, in accordance with the design.

The defined quantities shall be paid per contracted unit price for square meter.

The price includes all costs of material supply, production and placing of asphalt mixture, transport, equipment all everything else needed to complete the works.

If the works do not completely fulfil the requirements given in these GTR, the quality shall be evaluated according to these GTR.

Decreased values of works shall be deducted from the Contractor's contracted price.

7.6 BITUMINOUS BASE-WEARING COURSE (BBWC)

7.6.1 DESCRIPTION

Bituminous base-wearing course (BBWC) is a base bitumen course, which serves as a wearing course, made of a mixture of stone flour, stone material with nominal grain size 22 mm and bitumen as binder, made and placed according to hot procedure. It is placed exclusively on roads intended for light or very light traffic load.

The BBWC is divided as follows:

- Nominal size of largest stone material grain, and
- Type of stone material.

According to the nominal size of largest stone material grain, the BBWC is divides as follows:

- BBWC 16 and
- BBWC 22

According to the type of stone material, the BBWC is divided as follows: BBWC A – made of crushed

stone detribus with addition of stone flour,

BBWC B - made on the basis of separated or partially separated crushed stone material, with a correction of composition by addition of sand and/or stone flour (according to need), or separated natural loose stone material with addition of at least 30% (m/m) of stone compound with crushed grains above 4 mm and/or stone flour (according to need), and

BBWC C – made on the basis of separated natural loose stone material, with correction of compound by addition of sand and/or stone flour (according to need).

Table. Application and technological thickness of placed BBWC

Type of BBWC	Technological thickness of placed layer, mm
BBWC 16A BBWC 16B BBWC 16C	45 to 60
BBWC 22A BBWC 22B BBWC 22 C	60 to 80

7.6.2 QUALITY REQUIREMENTS FOR COMPONENT MATERIALS

Stone grit

Stone grit shall satisfy the quality requirements given in these GTR.

For BBWC production the following quality categories of stone grit are used:

- KS-S-I, KS-S-II, KS-S III, KS-S-IV, KS-S-V, KS-S-VI i KS-S-VIII.

7.6.3 SEPARATED AND PARTIALLY SEPARATED GRANULAR STONE MATERIAL

Separated and partially separated granular stone materials shall satisfy the quality requirements given in these GTR, and the following quality categories shall be used:

- KM-I, KM-II and KM-III.

7.6.4 STONE FLOUR

Return stone flour separated in the asphalt plant shall be returned into the production process under the condition that the filler from that stone flour satisfies the quality requirements given in these GTR.

7.6.5 BITUMEN BINDER

Road construction bitumen BIT 60 or BIT 90 is used for production of BBWC, according to the requirements of the ASTM or ARDM standard, i.e. road construction bitumen mark 50/70 or 70/100 according to the EN 12591 standard.

The used bitumen shall satisfy the quality requirements given these GTR.

7.6.6 QUALITY REQUIREMENTS FOR BBWC

Asphalt mixture composition

Screen opening size (mm)	BBWC 16	BBWC 22
	Percent passing, %(*m/m*)	
0,09	5 to 12	4 to 14
0,25	9 to 30	7 to 37
0,71	15 to 40	12 to 53
2,0	26 to 55	21 to 65
4,0	38 to 70	30 to 74
8,0	58 to 88	44 to 85
11,2	74 to 98	54 to 92
16,0	95to100	70 to 100
22,4	100	97 to 100
31,5		100

Table 34 – Scope of asphalt mixture stone compound grain size distribution for BBWC

Type of BBWC	Provisional percentage of bitumen % (*m/m*)
BBWC 16	4,5 to 6,5
BBWC 22	4,0 to 6,0

Table 35 - Provisional percentage of bitumen in asphalt mixture for BBWC

The exact percentage of bitumen shall be determined by the production of previous composition of asphalt mixture and working composition of asphalt mixture.

7.6.7 PROPERTIES OF ASPHALT MIXTURE

Property	BBWC
Stability at 60 °C, minimum, kN	4
Ratio of stability and deviation at 0 °C, minimum, kN/mm	1,4
Percentage of voids, %(*V/V*)	2 to 5
Filling of stone compound voids with bitumen, %	70 to 86

Table 36 - Physical and mechanical properties of asphalt mixture for BBWC

7.6.8 PROPERTIES OF PLACED COURSE

Property	BBWC
Percentage of gravel, % (*V/V*)	2 to 7
Rate of compactness, minimum, %	97
Thickness of course * - individually, maximum - mean value, maximum, %	- 15 % from the designed, but not more than -15 mm - 5 from the designed
Evenness of course: - IRI($_{100}$) , maximum, m/km - measuring staff 3 m, maximum, mm	3,0 10
Elevation of course: Allowed elevation deviation of course from the designed elevation position, maximum %	10
Cross-fall: Allowed deviation from the designed cross-fall (each profile), maximum, %(aps.)	0,4
Position: Allowed deviation (horizontal position of left and right edge) from the designed elevation position, maximum, mm	50

Table 37 - Percentage of voids, rate of compactness and thickness of placed BBWC

* Thickness greater than 20% from the designed thickness shall not be taken into calculation of the mean thickness.

7.6.9 QUALITY CONTROL OF BBWC

Preliminary testing

Activities prior to the beginning of asphalt works, with respect to previous material suitability testing, production of previous and working compositions and the test section, shall be done in accordance with these GTR.

7.6.10 CONTROL TESTING

CONTROL TESTING OF COMPONENT MATERIALS

Control testing of component materials shall be done in accordance with these GTR.

CONTROL TESTING OF PRODUCED ASPHALT MIXTURE

Samples of asphalt mixture are taken a the asphalt mixture production plant or at the site.

Composition of asphalt mixture is checked by testing at least one sample at every 500 tons of produced asphalt mixture.

Properties are tested in accordance with these GTR.

Physical and mechanical properties of asphalt mixture are checked by testing at least one sample at every 1000 tons of produced asphalt mixture.

Properties are tested in accordance with these GTR.

7.6.11 AUDIT TESTING

AUDIT TESTING OF COMPONENT MATERIALS

Samples of component materials for asphalt mixture production are taken at the asphalt production plants and tested in accordance with these GTR.

AUDIT TESTING OF PRODUCED ASPHALT MIXTURE

Samples of asphalt mixture for audit testing shall be taken at the site.

Composition, physical and mechanical properties of asphalt mixture shall be tested at every 6000 m^2 of placed BBWC.

AUDIT TESTING OF PLACED LAYER

Rate of compactness, percentage of voids, thickness of placed course and bonding of layers are tested on samples taken at every 2000 m^2 of placed course surface.

Evenness of placed course shall be tested in accordance with these GTR.

Elevation, cross-fall and position of placed course shall be checked with appropriate equipment by testing at least 20% of data obtained by the Contractor during control testing of asphalt mixture placing.

7.6.12 QUALITY EVALUATION OF PLACED BBWC

The placed BBWC shall be evaluated and taken over by the Supervising Engineer on the basis of control testing and audit testing results.

Percentage of bitumen defined in the asphalt mixture samples during contorl testing and audit testing shall satisfy the requirements given.

Grain size distribution of stone mix defined on asphalt mixture samples during control testing and audit testing shall satisfy the requirements given.

Physical and mechanical properties of asphalt mixture shall satisfy the requirements given.

Properties of placed asphalt course shall satisfy the requirements given.

All faults found not satisfying the given requirements shall be solved by the Contractor.

All costs of remedy shall be at the expense of the Contractor, including all additional testing and measurements needed to determine the validity of the remedy. Works not satisfying the given requirements and not remedied by the Contractor according to the request of the Supervising Engineer, shall not be paid to the Contractor.

7.6.13 CALCULATION OF WORK AND STANDARTS

Quantity of performed works is calculated per square meter of BBWC upper surface area placed according to the design. Defined quantities shall be paid per contracted unit price per square meter.

The price includes all costs of supply, production and placing of asphalt mixture, transport, equipment and everything needed for the completion of works.

If the works do not completely satisfy the requirements set in these GTR, the quality is evaluated according to these GTR.

EN 12591:1999	Bitumen and bituminous binders – Specifications for paving grade bitumen
EN 12697-27:2000	Bituminous mixtures – Test methods for hot mix asphalt – Part 27: Sampling
EN 12697-28:2000	Bituminous mixtures – Test methods for hot mix asphalt – Part 28: Preparation of samples for determination of binder content, water content and grading
prEN 12697-36:1996	Bituminous mixtures – Test methods for hot mix asphalt – Part 36: Method for the determination of the thickness of a bituminous pavement

8. ASPHALT PAVEMENT SURFACING

8.1 GENERAL INFORMATION

This chapter deals with the minimum quality requirements for materials, products and works used for execution of asphalt road surfacing. The GTR are written in a manner that they constitute an integral part of a contract, having the conditions relevant to special works included in the contract as Special technical requirements. (STR).

Materials, products, equipment and works shall be done in accordance with standards and technical requirements stated in the design documentation. If no standard is stated, the application of respective EU standard is compulsory. If, in the meantime, a standard or regulation becomes non valid, the replacing standard or regulation shall be applicable.

The Contractor may propose the application of accepted technical regulations (standards) of an international standardizing body (ISO, ES, DIN, ASTM) with a written explanation and approval of the supervising engineer. This change shall be approved by the supervising engineer with the consent of the designer. The Contractor shall enter the change into the implementation design.

8.1.1 DEFINITIONS

General terms and expressions and their meaning in these General technical requirements are given in chapter 0. Only definitions which are not given in chapter 0. are given below, and which are relevant only for this chapter.

8.1.2 GENERAL TERMS

Asphalt by hot procedure is asphalt obtained by mixing of hot bitumen into the hot stone material.

Asphalt by cold procedure is obtained by mixing of bitumen emulsion or cut- back bitumen into stone material.

Asphalt road surfacing is the finishing layer of the pavement structure, consisting of tack coat and wearing course, i.e. only of asphalt wearing course.

Bitumen tack coat is a thin bitumen layer intended for bonding of asphalt layers, or for bonding the asphalt layer with a layer made on the basis of hydraulic binders. It is made of bitumen emulsion or hot bitumen by spraying.

Wearing course is the finishing course of the asphalt road surfacing.

WC – AC is an asphalt-concrete mixture wearing course, made according to the principle of the most dense grain packing.

WC – SMA is a wearing course made of "Split-mastic asphalt"

Poured asphalt (PA) is asphalt made according to the hot procedure, placed by pouring.

Micro – asphalt (MA) is a type of thin layered asphalt coating, made of asphalt according to cold procedure, by mixing of bitumen emulsion into stone material.

Trial section is a part of a road under construction where the Contractor's competence is proven to execute individual pavement structure asphalt courses, in accordance with the quality requirements stated in these GTR.

Surface dressing is a type of thin layered asphalt coating, made by previous bitumen binder spraying and blinding with stone grit fractions.

Initial job mix of asphalt mixture is laboratory proof that it is possible to obtain the required asphalt mixture quality with the chosen materials and composition.

Job mix formula of asphalt mixture is proof that is possible to produce an asphalt mixture on a chosen asphalt mixing plant of the quality obtained by initial job mix.

Rolled asphalt is asphalt made by hot procedure, compacted by rolling during placing.

Split-mastic asphalt (SMA) (from German Splitmastixasphalt) is a type of asphalt mixture of discontinuous grain size distribution of stone mixture, intended for execution of road surfacing wearing courses of highways and roads of the very heavy and heavy traffic load group.

Bonding layer (BL) is a layer placed between the base course and asphalt wearing course.

8.1.3 MATERIALS

Bitumen is a black, sticky, at normal temperature semisolid or solid mass, composed of hydrocarbons and their non-metallic derivatives , soluble in toluen, found in nature or obtained by petroleum processing. Bitumen has the role of binder in asphalt mixtures.

Bitumen emulsion is a dispersible bitumen agent, dispersed in water, containing an emulsifying agent.

Road construction bitumen is used in production of asphalt mixtures, obtained from the surplus of vacuum distilled oil.

Partially separated granular stone material is a non-crushed (gravel, scree) or granular stone material obtained by crushing of stone, gravel or scree, nominal grain size between 0 and 32 mm, separated and declared according to the highest nominal grain size.

Crushed stone grit is a granular material, grain size ranging from 2 to 32 mm, obtained by crushing of stone, gravel or scree and separated in accordance with the standard ASTM or ARDM.Stone grit obtained by crushing of gravel shall contain at least 90% (m/m) of crushed gravel grains (crushed grains are those grains having at least 50% of crushed surface), and it shall contain maximum 2% of completely non-crushed grains.

Crushed sand is a granular stone material, grain size ranging from 0 to 2 mm or from 0 to 4 mm, obtained by crushing of stone, gravel or scree.

Crushed gravel contains a certain percentage of crushed grains, i.e. grains with more that 50% of crushed surface area.

Stone is a part of a rock, separated by natural forces or by means of planned efficient mechanical influence. Rock (rock mass) is a component part of the Earth's crust, of specific texture, structure, mineral composition and means of geologic occurrence. Genetically, rocks are classified as igneous rocks, sedimentary rocks and metamorphic rocks.

Stone grit (stone aggregate) is a granular stone material, grain size ranging from 2 to 32 mm and separated according to basic fractions or inter-fractions, according to the requirements of standards

Stone flour is a crushed or ground granular stone material, grain size up to 0,71 mm. It shall contain at least 80% (m/m), i.e.65% (m/m) of filer, depending on the quality of stone flour, according to the ASTM or ARDM standard.

Non-crushed stone grit is a naturally pulverized granular stone material, gravel or scree, grain size ranging from 2 to 32 mm, separated according to the ASTM or ARDM standard.

Non-separated crushed stone material is a mixture of crushed stone, grain size ranging from 0 to the maximum nominal grain size (expressed in mm).

Polymer modified bitumen emulsion is a dispersible system of polymer modified bitumen or latex dispersed in water, containing an emulsifying agent

Polymer modified bitumen (PmB) is a mixture of road construction bitumen and different types of polymer (elastomers, duromers, tar-polymers).

Natural sand is a loose, clastic sediment, grain size ranging from 0,02 mm to 2 mm.

Filler is a part of stone flour, grain size up to 0,09 mm.

Cut-back bitumen is bitumen subsequently diluted by appropriate oils.

Separated granular stone material is a non-crushed stone material (gravel, scree) or granular material obtained by crushing of stone, gravel or scree, smallest nominal grain size 2 mm to the largest nominal grain size 32 mm, not separated according to the ASTM or ARDM standard, but separated according to some other fractions declared according to the lowest and highest nominal grain size.

Scree is a pulverized, non-rounded, loose stone material obtained by natural wear of rocks (in situ) or after a very short "shift" mainly gravitational, with grain size larger that 2 mm.

Gravel is a loose clastic sediment mostly consisting of rounded conglomerate, size ranging from 2 mm to 63 mm. It can be separated, partially separated or separated according to the ASTM or ARDM

standard.

Granular stone material is a granulated stone material, grain size ranging from 0 to the largest nominal size (expressed in mm), not ground (gravel, scree) or obtained by grinding of rock, gravel or scree.

8.2 MATERIALS FOR ASPHALT MIXTURE PRODUCTION

8.2.1 CRUSHED STONE

The use of certain types of stone in the pavement structure asphalt courses depends on the mineralogical and petrographic composition, the physical and mechanical properties and the granular stone materials production technology.

Laboratory testing

Stone is sampled in accordance with the ASTM or ARDM standard. Following properties are tested on stone samples:

- Mineral–petrographic composition EN 12407
- Compressive strength EN 1926
- Resistance to wear by sanding
- Water absorption EN 13755
- Stone resistance to freezing EN 12371
- Volume mass EN 1936
- Density EN 1936
- Porosity EN 1936
- Resistance to Na_2SO_4 EN 12370.

Quality requirements

Property	Tone quality categories			
	K-	K-II	K-	K-
Mineralogical-petrographic division	igneous group*	Igneous and carbonate group**	Carbonate group**	Carbonat e group**
Compressive strength in dry state, minimum MPa Resistance	160	140	120	120
to wear by sanding, maximum $cm^3/50\ cm^2$ Water absorption, maximum,	12	18	22	25
%(*m/m*) Resistance to frost	0,75	0,75	1,0	1,2
Resistance to Na_2SO_4,	resistant	Resistant	Resistant	resistant
maximum %(*m/m*)	5 (3)***	5 (3)***	5	5

Table 38 - Categories of stone quality as raw material for production of granular stone material

* Rock of igneous and/or metamorphic origin but of silicate composition (in further text – silicate composition)

** Rock of igneous and/or metamorphic origin but of carbonate composition (in further text – carbonate composition)

*** For surface treatment

8.2.2 STONE GRIT

Stone grit is a granular stone material, ranging from 2 to 32 mm in size, separated on basic and/or semi-fractions according to standard.

Laboratory testing:

Stone grit shall be sampled in accordance with the requirements of EN 932-1 standard, and the testing shall be prepared according to the EN 932-1 standard.

The following properties shall be tested on stone grit material:

- Grain size distribution — EN 933-1
- Percentage of particles ▯ 0,09 mm
- Percentage of clay balls
- Percentage of organic impurities
- Percentage of grains of unfavorable shape — EN 33-4
- percentage of weak and friable grains
- bitumen coated — EN 12697-11
- water absorption — EN 1097-6
- resistance to Na_2SO_4 — EN 1367-2
- resistance to wear and crushing — EN 1097-2
- rate of polished stone value — EN 1097-8
- mineral-petrographic composition — EN 932-3
- percentage of crushed grains[2] — EN 933-5
- density — EN 1097-6

Quality requirements for stone grit

Basic fraction (mm)	Falling through laboratory screens, %(m/m)								
	1	2	4	8,0	11,2	16	22,4	31,5	45
4/8		5	15 (10)*	≥ 90	100				
8/16			5	15	>35 i <70	≥ 90	100		
16/32				5		15	>35 i <65	≥ 90	100
Semi-fraction (mm)									
2/4	5	15 (10)*	≥ 90	100					
8/11			5	15 (10)*	≥ 90	100			
11/16				5	15 (10)*	≥ 90	100		
16/22					5	15	≥ 90	100	
22/32						5	15	≥ 90	100

* For surface treatment

Table 39 - Requirements for grain size distribution of stone grit

[1] Tested only in stone grit obtained by crushing of gravel if there is no certificate of validation of gravel as raw material.
[2] Tested only in stone grit obtained by crushing of gravel

Bitumen coating of stone grit intended for wearing courses shall be minimum 100/90, and for other layers minimum 100/85.

Stone grit, depending on the mineral – petrographic division, means of obtainment and

production as well as the physical and mechanical properties is divided into:

- three categories of crushed stone grit of igneous and/or metamorphic origin, and
- ten categories of crushed stone grit of sedimentary origin, obtained by crushing of stone and gravel and uncrushed stone grit, gravel and scree

Property	Fractions and semi-fractions,	
Percentage of particles smaller than 0,09 mm, maximum, %(*m/m*)	mm 2/4	4/8 do
	16/32	
	3,0 (1,0)*	1,0 (0,5)*

Organic impurities, maximum, % (*m/m*)	0,5 (0,2)*	0,25 (0,2)*
Percentage of clay balls, maximum, % (*m/m*)	0,25 (0,1)*	0,25 (0,1)*

Table 40 - Purity requirements for stone grit

* For surface dressing

Quality requirements of physical and mechanical properties and stone grit category are given in tables below:

* For WC-SMA and surface dressing

Property	Categories of quality of physical and mechanical properties of crushed stone grit		
	KS-E-I	KS-E-II	KS-E-III
Production procedure	crushed	crushed	crushed
Resistance to Na_2SO_4, maximum (*m/m*)	3,0	3,0	3,0
Water absorption, maximum, %(*m/m*)	1,6 (1,2)*	1,6 (1,2)*	1,6 (1,2)*
Percentage of grains of unfavorable shape, %(*m/m*)	20 (10)*	20 (10)*	20 (10)*
Percentage of weakgrains maximum, %(*m/m*)	3,0 (1)*	3,0 (1)*	3,0
Resistance to crushing (Los Angeles), maximum, %(*m/m*)			

Table 41 - Quality requirements for physical and mechanical properties of stone grit of igneous and/or metamorphic origin

8.2.3 SEPARATED AND PARTIALLY SEPARATED GRANULAR STONE MATERIAL

Separated granular stone material is non-crushed material, (gravel, scree), or, material obtained by crushing of stone, gravel or scree, lowest nominal grain size
2 mm to largest nominal grain size up to 32 mm, which is not separated in accordance to the standard but separated to some other fractions declared according to the lowest and highest nominal grain size.

Partially separated granular stone material is non-crushed material (gravel, scree), or granular material obtained by crushing of stone, gravel or scree,

nominal grain size from 0 to 32 mm maximum, separated and declared according to the highest nominal grain size.

Property	Categories of quality of physical and mechanical properties of crushed and non-crushed stone grit of igneous origin			
	KS-S-I	KS-S-II	KS-S-III	KS-S-IV
Raw material	stone of carb. components . or gravel	stone of carb. components . or gravel	stone of carb. components . or gravel	gravel or sprinkling mat.
Production procedure Resistance to	crushed	crushed	crushed	non-crushed
Na_2SO_4, maximum (*m/m*) Water absorption, maximum,	3,0	3,0	3,0	5,0
%(*m/m*) Percentage of grains of unfavorable	1,2	1,2	1,2	1,2
shape, %(*m/m*) Percentage of weak grains	20 (10)*	20 (10)*	20	20
maximum, %(*m/m*) Resistance to crushing (Los Angeles),	3,0 (2)*	3,0 (2)*	3,0	5,0
maximum, %(*m/m*) Stone polish values, minimum,	25	28	30	28
(VPK) Percentage of crushed grains in crushed gravel, minimum, %(*m/m*)	44**	44**	--	--
	90	90	90	--

Table 42 - Quality requirements of physical and mechanical properties of stone grit obtained by crushing stone of igneous origin, gravel and scree and non-crushed stone grit (gravel,scree).

* For surface dressing only
** For application in wearing courses only

Laboratory testing

Separated and non-separated granular stone material shall be sampled in accordance with the EN or ARDM standard requirements. The following properties shall be tested on separated and partially separated granular stone material:

- grain size distribution — EN 933-1
- percentage of particles under 0,09 mm
- percentage of particles under 0,002 mm
- percentage of clay balls
- percentage of impurities of organic origin
- percentage of grains of unfavorable shape — EN 933-4
- percentage of weak and friable grains
- bitumen coated — N 12697-11
- water absorption — EN 1097-6
- resistance to Na_2SO_4 — EN 1367-2
- resistance of grins to crushing and wear — EN 1097-2
- mineral –petrographic composition — EN 932-3

[3] Tested in case of possible contamination with clay particles

- percentage of crushed grins[5] EN 933-5
- density EN 1097-6

Quality requirements of physical and mechanical properties of stone grit obtained by crushing stone of igneous origin, gravel and scree and non-crushed stone grit gravel, scree.

Property	Quality categories of physical and mechanical properties of crushed and non-crushed stone grit of igneous origin					
	KS-S-V	KS-S-VI	KS-S-VII	KS-S-VIII	KS-S-IX	KS-S-X
Raw materials	stone of carb. components. or gravel	stone of carb. components. or gravel	stone of carb. components. or gravel	stone of carb. components. or gravel	stone of carb. components. or gravel	gravel or sprinkling mat.
Production procedure	crushed	crushed	crushed	crushed	crushed	non-crushed
Resistance to Na_2SO_4, maximum (*m/m*)						
Water absorption, maximum, %(*m/m*)	5,0	5,0	5,0	5,0	5,0	5,0
Percentage of grains of unfavorable shape, %(*m/m*)	1,2	1,6	1,6	1,6	1,6	1,6
Percentage of weak grains maximum, %(*m/m*)	20	20	20	30	30	30
Resistance to crushing (Los Angeles), maximum, %(*m/m*)	5,0	5,0	5,0	5,0	5,0	5,0
Percentage of crushed grains in crushed gravel, minimum, %(*m/m*)	25	30	35	30	35	35
	90	90	90	30	30	--

Quality requirements

Grain size distribution of separated and partially separated granular stone material, nominal grain size from 0 to 32 mm maximum, shall be evaluated according to their declaration and use in particular pavement structure asphalt course.

Table 43 – Quality requirements of separated and partially separated granular stone materials

Property	Nominal size of granular stone material, mm				
	separated fractions of granular stone material	partially separated granular stone material			
	4/11; 8/22 etc.	0/8	0/16	0/22	0/32
Percentage of particles smaller than 0,09 mm maximum, %(*m/m.*)	3	15	10	10	10
Percentage of particles smaller than 0,002 mm, maximum, %(*m/m*)*	--	2	2	2	2
Percentage of clay balls, maximum, %(*m/m*)	0,25	0,25	0,3	0,3	0,3
Percentage of organic impurities, maximum, %(*m/m*)	0,3	0,3	0,3	0,3	0,3

In order that the separated granular stone material fractions, according to their grain size distribution, correspond to their declared composition, they shall satisfy the requirement of maximum 20% (m/m) smaller fractions and maximum 15% (m/m) larger fractions.

In order that the partially separated granular stone material fractions, according to their grain size distribution, correspond to their declared composition, they shall satisfy the requirement of maximum 15% (m/m) of larger grains.

The physical and mechanical properties of separated stone materials are tested on declared fractions. The test results of physical and mechanical properties shall be expressed in mass percentages, % (m/m).

For partially separated stone materials of nominal size ranging from 0 to 32 mm maximum, test results of physical and mechanical properties, obtained on laboratory declared fractions, are expressed in mass percentages, %(m/m) and recalculated for the complete sample. Quality requirements for physical and mechanical properties of partially separated stone materials, are relevant for the complete sample.

Table 44 – Quality requirements for physical and mechanical properties of separated and partially separated granular stone materials.

Property	Quality categories of physical and mechanical properties of separated and partially separated granular stone materials				
	KM-I	KM-II	KM-III	KM-IV	KM-V
Raw materials	stone of silicate comp..	stone of carbonate origin or gravel	stone of carbonate origin or gravel	gravel or scree	gravel or scree
Production procedure	crushed	crushed	crushed	non-crushed	non-crushed
Resistance to Na_2SO_4, maximum (*m/m*)	5,0	5,0	5,0	5,0	5,0
Water absorption, maximum, %(*m/m*)	1,2*	1,2*	1,2*	1,2*	1,2*
Percentage of grains of unfavorable shape, %(*m/m*) Percentage	20	20	30	30	20
of weak grains maximum, %(*m/m*) Resistance to crushing	3	5	5	5	5
(Los Angeles), maximum, %(*m/m*) Percentage of crushed	22	25	30	35	28
grains in crushed gravel, minimum, %(*m/m*)	90	90	30	--	--

* Water absorption can be greater if the resistance criterion to freezing is fulfilled .

Bitumen coating of separated and partially separated granular stone material shall be minimum 100/85.

8.2.4 SAND

Sand is a granular material, naturally granulated (natural sand) or obtained by crushing of stone, gravel or debris (crushed sand).

According to the largest grain size, it is divided as follows:

- sand 0/2 mm
- sand 0/4 mm

Laboratory testing

The sand shall be sampled in accordance with the EN 932- 1 standard, and prepared for testing according to the EN 932-2 standard.
The following properties shall be tested/determined on crushed or natural sand:

- grain size distribution EN 933-1
- grain size modulus
- percentage of particles smaller than 0,09 mm
- percentage of clay balls
- percentage of organic impurities
- sand equivalent EN 933-8
- mineral-petrographic composition EN932-3.

Quality requirements

Square screen openings (mm)	Type of sand	
	0/2 mm	0/4 mm
	Fall through screen, %(m/m)	
0,09	0 to 10 (15)*	0 to 10 (15)*
0,25	15 to 35	12 to 25
0,71	40 to 85	33 to 70
2,0	90 to 100	65 to 100
4,0	100	90 to 100
8,0		100
Granularity modulus	1,70 to 2,55	1,95 to 3,00

* For micro-asphalt only

Table 45 - Grain size distribution requirements for sand

Property	Quality categories of igneous origin crushed sand			
	DP02-E-I	DP02-E-II	DP04-E-I	DP04-E-II
Type of sand	0/2 mm	0/2 mm	0/4 mm	0/4 mm
Percentage of particles smaller than 0,09 mm, maximum, %(*m/m*)	5	10 (15)*	5	10 (15)*
Sand equivalent, minimum, % Percentage	70	60	70	60
of clay balls, maximum % (*m/m*) Organic impurities, maximum %	0,5	0,5	0,5	0,5
(*m/m*)	0,3	0,3	0,3	0,3

Table 46 - Quality categories of igneous origin crushed sand

*For micro-asphalt only

Property	Quality categories of sedimentary origin crushed sand	
	DP02-S	DP04-S
Type of sand	0/2 mm	0/4 mm
Percentage of particles smaller than 0,09 mm, maximum, %(*m/m*)	10 (15)*	10 (15)*
Sand equivalent, minimum, %	60	60
Percentage of clay balls, maximum% (*m/m*)	0,5	0,5
Organic impurities, maximum% (*m/m*)	0,3	0,3

Table 47 - Quality categories of sedimentary origin crushed sand

- For micro-asphalt only

Property	Quality categories of natural sand	
	PP01	PP02
Type of sand	0/1 mm	0/2 mm
Percentage of particles smaller than 0,09 mm, maximum, %(*m*/*m*)	5	5
Sand equivalent, minimum, %	70	70
Percentage of clay balls, maximum% (*m*/*m*)	0,5	0,5
Organic impurities, maximum% (*m*/*m*)	0,3	0,3

Table 48 - Quality categories of natural sand

8.2.5 STONE FLOUR

Stone flour is crushed or pulverized granular stone material, grain size to 0,71 mm. Part of stone flour with grain size to 0,09 mm is called filler. Stone flour used for production of asphalt mixtures shall be produced as follows:

- Base product at the stone flour production plant
- By-product during production of stone debris obtained by dusting at the separation plant.
- Cyclone material or return stone flour at the dusting system, as part of the asphalt production plant.

Laboratory testing

Stone flour shall be sampled at the production plant, in accordance with the EN 932-1 standard, and it shall be prepared for testing according to the EN 932-2 standard. The quality and usability of stone flour is determined by testing of the overall properties:

- External appearance ofstone flour
- Microscopic examination ofstone flour
- Percentage of moisture
- Grain size distribution EN 933-10
- Grain size distribution of particles up to 0,063 mm
- Purity of filler
- Percentage of voids in dry compacted state EN 1097-4
- Filler density EN 1097-7
- Bitumen hardening index
- Insoluble stone flour residue in HCl[7] solvent
- Mineral-petrographic composition of stone flour determined by thermal diffraction and ex-ray analysis[7]

[6] It he stone flour is separated during the production process in the air stream (by cyclone).
[7] If it does not satisfy the plasticity index and if clay minerals might be present .

Quality requirements

Table 49 - Stone flour quality categories

Square screen openings, mm	Quality category of stone flour according to grain size distribution			
	KB-I		KB-II	
	Fall through screen(m/m)			
	minimum	Maximum	Minimum	maximum
0,063	60	85	50	85
0,09	80	95	65	95
0,25	95	100	95	100
0,71	100	--	100	--

Property	Purity and quality requirements for physical properties of filler	
	For fillers of carbonate composition	For other fillers
Plasticity index, maximum, %(*m*/*m*)	4	--
Effective volume filler concentration (C_{vef}), minimum	0,89	
Voids in dry compacted state, %(*V*/*V*)	30 to 40	--
Bitumen hardening index	1,8 to 2,4	--

Table 50 - Purity and quality requirements for physical properties of filler

If the filler does not satisfy some of the set quality requirements, additional testing shall be undertaken to determine its usability in asphalt mixtures.

8.2.6 ROAD CONSTRUCTION BITUMEN

Laboratory testing

Bitumen shall be sampled according to the EN 58 standard and it shall be prepared for sampling according to the EN 12594 standard.

The road construction bitumen quality shall be evaluated by testing the following properties:

- penetration — EN 1426
- softening point (PK) — EN 1427
- penetration index — B.H8.614 or EN 12591
- ductility — B.H8.615
- breaking point according to Fraass — EN 12593
- density — EN ISO 3838
- change of properties by heating to 163 °C — EN 12607-1
- paraffin number — EN 12606-1
- dynamic viscosity — EN 12596
- cinematic viscosity — EN 12595
- flash point — ISO 2592
- percentage of soluble components — EN 12592.

Quality requirements

Road construction bitumen is divided in groups according to the penetration values and shall satisfy the quality requirements according to EN 12591 standards.

8.2.7 POLYMER MODIFIED BITUMEN (PMB)

Modified bitumen shall be used for production of asphalt mixtures with increased deformation resistance, i.e. increased flexibility at lower exploitation temperatures.

Quality requirements of modified bitumen of asphalt mixture in the production stage at the asphalt production plant are not the subject of these GTR.

Laboratory testing

Polymer modified bitumen shall be sampled according to the EN 58 standard and tested according to the EN 12594 standard.

Quality of polymer modified bitumen shall be evaluated by testing the following properties:

• Penetration	EN 1426
• Softening point (PK)	EN 1427
• Breaking point according to Fraass	EN 12593
• elasticity	EN 13398
• density	EN ISO 3838
• stability during storage	EN 13399
• flash point	ISO 2592
• change of properties after aging	EN 12607-1 or EN 12607-3.

Quality requirements

	Type of bitumen				
Property	PmB 70/100-48	PmB 50/70-53	PmB 50/70-65	PmB 30/50-58	PmB 10/40-63
Penetration at 25 °C, between, mm/10	70 do 100	50 do 70	50 do 70	30 do 50	10 do 40
Softening point according to PK, minimum, °C	48	53	65	58	63
Breaking point according to Frass, maximum , °C	-18	-15	-15	-10	-5
Elasticity[8] at 25 °C, minimum, %	50	60	75	50	50
Stability during storage, difference in softening point according to PK, maximum, °C	5	5	5	5	5
Change of properties after ageing					
Change of mass, maximum, %(*m/m*)	0,8	0,5	0,5	0,5	0,5
Penetration slow down, maximum, %	55	60	60	60	60
Softening point increase, Maximum, °C	9	9	10	8	8
Softening point decrease, maximum, °C	2	2	5	2	2
Elasticity at[8] 25 °C, minimum, %	50	50	50	50	50

Table 51 - Quality requirements of polymer modified bitumen

All types of polymer modified bitumen shall have good adhesion to stone material (100/95 according to the EN standard), and flash point above 235 °C (ISO 2592 standard).
In special circumstances application of other types of polymer modified bitumen shall be allowed with properties according to the EN 14023 standard.

Manufactured or supplier of polymer modified bitumen shall present the Client with the following data:

- Type of PmB,
- Type of polymer used in bitumen modification process,
- Properties given
- density,
- means and period of storage,
- lowest and highest storage temperature,
- equivalent viscosity temperature (0,268 Pa s).

8.2.8 BITUMEN BINDER EMULSION

Bitumen emulsion shall be used for bonding of asphalt layers of for bonding of asphalt layer with any other type of base. It is applied by spraying on a dry surface

Valid for elastomer modified bitumen in an even layer. Amount of emulsion depends on the state of the base surface with respect to type and texture.

Depending on the type of stone material in the base, a semi stable anion and cationic bitumen emulsion shall be used, with 55% (m/m) minimum bitumen content.
For better asphalt layers bonding, a cationic polymer bitumen emulsion shall be used. This type of bitumen emulsion is sprayed on the base where a polymer modified bitumen asphalt mixture shall be placed.

Laboratorytesting

Means of sampling, quantity and number of samples are defined by the EN standard.

The following properties of the bitumen emulsion shall be tested:

• viscosity	EN 12846
• percentage of binder	EN 1428
• degree of stability	EN 13075-1
• homogeneity	EN 1429
• storage stability	EN 1429
• of bitumen coat under water	EN 13614-2

The following properties are tested on polymer modified bitumen emulsion:

• percentage of binder	EN 1428
• viscosity	EN 12846
• storage stability	EN 1429

- performance of bitumen emulsion under water EN 13614-2
- softening point of extracted binder EN 1427
- elasticity of extracted binder EN 13398.

Quality requirements

Anion bitumen emulsion shall be in accordance with the standard a. Bitumen emulsions whose quality requirements comply to the Austrian standard ÖNORM 3503 shall be used for base spraying. The softening point of extracted binder in polymer emulsions shall be minimum 27°C and elasticity greater than 40%

Bitumen emulsion for micro-asphalt

For production of micro-asphalt mixtures according to cold procedure, e.g. binder or polymer modified bitumen cationic emulsions shall be used.

Laboratory testing

- Type of charge EN 1430
- Percentage of binder EN 1428
- Residue on screen EN 1429
- Storage stability EN 1429

- viscosity EN 12846
- stability during breaking
- adhesion
- softening point ofextracted binder EN 1427
- breaking point of extracted binder
- according to Fraass EN 12593
- elasticity of extracted binder EN 13398.

Quality requirements

Property	Requirement
Type of charge External	Cationic
appearance	brown, liquid, homogenous
Percentage of bitumen, minimum, %(*m*/*m*)	58
Residue on screen, maximum, %(*m*/*m*) Storage	0,5
stability after4 weeks, maximum, %(*m*/*m*)	0,5
Stability, minimum, g	150
Viscosity, viscosity meter for tar, 4mm, s	spec. prod.
Adhesion, %	100

Bitumen extracted from emulsion

Softening point, minimum, °C	50
Breaking point accord. to Fraass, maximum, °C	-15
Elasticity, 30 min., 25 °C, minimum, %	50

Table 52 - Quality requirements for bitumen emulsion for micro- asphalt mixture production according to cold procedure

8.2.9 BITUMEN BINDERS FOR SURFACE DRESSING

Cationic rapid setting emulsions, polymer modified emulsions and polymer modified bitumen shall be used for surface dressing.

60 – 70% emulsions are used, depending on the required thickness of bitumen coating around the stone grit particles, either hot or cold.

Bitumen emulsions used for surface dressing shall satisfy requirements according to the Austrian standard ÖNORM 3501.

Polymer modified bitumen emulsions shall satisfy the requirements of the Austrian standard ÖNORM 3501:1992 or requirements of the German technical requirements (type C) according to TL Pm OB.

Polymer modified bitumen shall satisfy the requirements of the German Technical requirements (type A) according to TL Pm OB.

8.2.10 BITUMEN AND ASPHALT ADMIXTURES

Admixtures are added in order to improve binder adhesiveness to the stone material, to improve the rheological properties of bitumen binder and/or asphalt mixture properties. Admixture temperature shall be stable in order to avoid their breaking during the asphalt mixture production process. It is advisable that the admixtures be added to the binder immediately before or during the asphalt mixture production process, The type and quantity shall be determined by preliminary laboratory testing.
During the "Splitmastic" production, "stabilizing" admixtures are added to the asphalt mixture in order to stop the bitumen runoff. For that purpose, admixtures of organic or inorganic origin are used.

8.2.11 SYNTHETIC MATERIAL

Asphalt mixtures can also be produced on the basis of synthetic materials, the usability of which is certified by special testing, depending on the type and use.

8.2.12 PROOF OF QUALITY AND MATERIAL USABILITY

The Contractor shall provide proof on the usability of all component materials for asphalt mixture production.

Laboratory testing and certification according to the special regulation "Order on compulsory certification of fractionated stone aggregate for concrete and asphalt" (Official Gazette no. 55/96) shall prove the quality and usability of:

- Stone grit, and
- Sand

In case that the quality requirements given in these GTR are higher than the ones given in the subject Albanian standards, the material shall not be used without additional quality, irrespective of the valid certificate.

In such cases additional proof on usability of that material shall be obtained. Usability of synthetic

material is proven by technical approvals.

Proof on the usability of all component materials for asphalt works shall be submitted by the Contractor to the supervising engineer for approval.

8.3 PRODUCTION, TRANSPORT AND PLACING OF ASPHALT MIXTURE

8.3.1 PRODUCTION OF ASPHALT MIXTURE

The Contractor shall undertake his own asphalt mixture production process control, including maintenance and calibration of measuring instruments on the asphalt plant, in accordance with the EN 13108-10 standard.

Before the start of production a sufficient quantity of material shall be stored at the production plant in order to guarantee uninterrupted production.

Stone materials shall be stored in such manner to avoid mixing or contamination. The surface on which stone materials are stored shall be concrete or asphalt, and the compartments separated. Each compartment shall have the nominal marking of the stored fraction.

Stone flour is stored in silos. Exceptionally, stone flour shall be stored in warehouses, in bags, but shall be protected from moisture, according to the provisions for cement.

All asphalt mixture admixtures, e.g. natural asphalt, fibers, polymer admixtures, hydra lime, shall be appropriately stored.

At the asphalt production plant, bitumen shall be properly stored in reservoirs with installed thermometers for temperature control. The highest temperature for heating of road construction bitumen is shown in table below. The heating temperature of polymer modified bitumen depends on the type of polymer and basic bitumen.
The reservoirs shall be marked and set for only one type of bitumen.

Type of bitumen	Bitumen temperature in reservoirs, °C
BIT 90 and 70/100	maximum170
BIT 60 and 50/70	Maximum180
BIT 45 and 30/45	maximum190

Table 53 - Highest storage temperature of road construction bitumen in reservoirs

Asphalt mixture production plant

Asphalt mixture production plant shall be technically equipped in a manner the enables production of asphalt mixture of the quality set in these GTR and maintain the constancy of mixture within the allowed deviations.
All measuring instruments at the production plant shall be calibrated at least once a year. The Contractor shall submit documents on calibration to the supervising engineer.
The batching plant shall provide a unified and controlled inflow on stone material from a sufficient number of feeders.

The drying drum shall provide efficient and unified drying and heating of stone material.

Stone material dusting and screening system shall provide efficient screening of stone mass at the full asphalt mixture production capacity.

Material obtained by the dusting process shall be stored in separate reservoirs. Uncontrolled return of the dusted material into the production process is not allowed.
Reservoirs for screened stone material shall be so equipped to prevent mixing of already screened material.

Batching plant for bitumen binder shall be daily checked and maintained, especially with the volume dozing of bitumen.
The asphalt production plant shall be equipped with precise equipment for measuring the temperature of component materials and the produced asphalt mixture.

Supervising engineer or authorized person shall at random check the complete production process and management of the asphalt mixture production process.

Temperature of produced asphalt mixture

The highest allowed asphalt mixture temperatures at the exit from the asphalt plant are given in table below. These temperatures are relevant for road construction bitumen.
Production temperatures of asphalt mixtures made on the basis of polymer modified bitumen depend on the used kind and PmB type.

Bitumen type	Asphalt mixture temperatures, °C
BIT 90 and 70/100	Maximum 170
BIT 60 and 50/70	Maximum 180
BIT 45 and 30/45	Maximum 190

Table 54 - Highest storage temperature of road construction bitumen in reservoirs

8.3.2 TRANSPORT OF ASPHALT MIXTURE

Asphalt mixture is transported t the site in tipper trucks. Bottom of the truck shall be made of metal or metal lined, clean and without dust, mud or other materials. In order to prevent sticking of the asphalt mixture, the bottom and sides of the truck box shall be sprayed by appropriate products. Petroleum products shall not be used when spraying.
The asphalt mixture shall be properly protected during transport from cooling, rain and dirt, irrespective of the weather conditions.

Base

Base, i.e. previously placed course on which the asphalt course shall be placed can be:

- Base course of loose granular stone material
- Base course of granular stone material stabilized by hydraulic binder, and
- Asphalt layer.

Placing of asphalt course on base course of loose granular stone material

Asphalt mixture can only be placed on a base that has been tested and taken over by the supervising engineer. Time period between the testing of base course and placing shall not be more than 24 hours and during this time, site transport shall be prohibited on the trial section.

If the base surface is damaged due to unfavorable weather, or for any other reason, it shall be repaired before placing the asphalt mixture.

Placing of asphalt course on base course stabilized by hydraulic binders

Placing of asphalt course on the base course stabilized by hydraulic binders shall commence at least seven days after the placing of the base course. With the approval of the supervising engineer and the Client, placing of asphalt course shall commence earlier if laboratory tests prove that damage to the placed courses shall not occur. Stabilized base course shall be dry and clean and all loose material removed from the surface.

Time period between the taking over of the base course and placing of the next shall be 24 hours maximum and during that time site transport shall be prohibited on the trial section.

Base sprayed with bitumen emulsion shall be dry or naturally moist.
Surfaces treated with bitumen emulsion or bitumen shall be protected from site traffic.
Placing of asphalt can commence after the bitumen emulsion “breaks”, i.e. after all water evaporates from the emulsion.

Evenness of the surface shall be in accordance with the requirements set in these GTR. Surfaces with inadequate evenness shall be improved. Decision on the means of improvement shall be taken by the supervising engineer.

Height of the placed base shall be in accordance with the designed height.

Placing of asphalt course on asphalt base

Placing of asphalt mixture on an asphalt base shall commence when the base is cleaned, dry and sprayed with bitumen emulsion. The spraying shall commence at least three hours before placing of asphalt so that the water can evaporate and the bitumen part binds to the base.

Weather conditions

Asphalt mixture is placed only under favorable weather conditions. Placing of asphalt mixture in rainy weather or on a wet base shall not be allowed. When placing the wearing course the base and air temperature shall be above 10°C, and when placing the binding and base course it shall be above +5°C.

In special circumstances (e.g. strong wind) the supervising engineer can stop the works on the base course even if the temperatures are above the minimum allowed, if there is reasonable doubt that the asphalt mixture and works shall not be of adequate quality under these weather conditions

Asphalt mixture temperature during the placing procedure

Asphalt mixture temperature at the placing site depends on the type of bitumen used in the asphalt mixture. Lowest allowed temperatures for asphalt mixture made with road construction bitumen at the placing site are given in table below.

Type of bitumen	Asphalt mixture temperature at the placing site °C
BIT 90 and 70/100	Minimum 135
BIT 60 and 50/70	Minimum 140
BIT 45 and 30/45	minimum 145

Table 55 – Lowest allowed asphalt mixture temperature at the placing site

Lowest asphalt mixture temperatures made on the basis of polymer modified bitumen depend on the kind and type of use PmB.

Machinery for placing of asphalt courses

- Finisher
- Rollers with:
- Rubber tyred roller, or combined
- Vibrating roller and
- Road roller / three wheel roller
- Truck tanker
- Water truck
- Bitumen sprayer
- Job mix heater
- Motor blower
- Power broom

Generally speaking, a sufficient number of different machinery and equipment, shall be used at the site, to enable optimum efficiency during placing of asphalt mixture. The efficiency of the machinery is seen at the trial section, according to these GTR.

Spreading and compacting of asphalt mixture

Asphalt mixture is usually machine placed, my means of asphalt finishers, to enable continuity in work, without stops. Asphalt finishers shall provide an uniform degree of pre-compression, at least 88% in relation to the optimal volume mass of asphalt mixture.

If asphalt mixture is placed with two or more finishers, they shall not be vertically distanced for more than 30 m, to enable hot connection of edges. They shall have equal working characteristics so that the course can be uniformly placed across the complete pavement width, with respect to the rate of compaction and the surface texture.

If gutters or marginal strips are not planned in the design, the pavement asphalt courses shall be placed so that the edge of each layer, in relation to the previous one is under an angle of approximately 45°

If a delay occurs in the placing of asphalt mixture due to a delay in transport or production, and the temperature drops below the lowest allowed temperature, the placing procedure shall be stopped. A proper transverse joint shall be executed at that point.

The asphalt mixture is spread at ascents so that the finisher moves from the lover level to the higher level.

On surfaces where the treatment with finishers is not possible, the asphalt mixture can be spread manually, with the approval of the supervising engineer, under the condition that the required quality of placed asphalt mixture is reached.

Except the obligatory control testing, it is necessary to visually check the quality of placed layer and immediately remove possible faults (e.g. marked segregation, marked change in layer thickness or height)

The spread asphalt mixture is rolled with an optimal number of rollers according to number and type. The Contractor shall ask for approval from the supervising engineer on the proposed combination of rollers and the regime of work.

Rubber – tyred rollers shall have all wheels of the same size and diameter. Pressure adjustment in the rubber tyres shall be possible for more efficient adjustment to the type and thickness of asphalt layer.

Standard rollers with vibrating effect have a significant depth effect as opposed to the static rollers. Depending on the layer thickness and the type of asphalt mixture, most efficient frequencies are determined by execution of a trial section.

For execution of thin asphalt courses, rollers with horizontal oscillations are used.

All three wheel rollers shall have a simple functional device which enables the roller sheeting to be uniformly coated with water. Use of petroleum products is prohibited. All rollers, irrespective of type, shall be of such quality to operate without jerks when changing direction and that they can be correctly driven.

Execution of joints and edges

The longitudinal joint is parallel to the road centerline and is executed as hot joint.
Transverse joint is perpendicular to the road centerline. Usually these are transverse joints executed at points of interruption.

The number and length of transverse and longitudinal joints shall be minimal, since joints are potentially weak points in the pavement structure.
Longitudinal and transverse joints shall be executed according to standards and the asphalt at points of connection shall have nearly the same density and characteristics as the other parts of the surface.

The edges of joints shall be vertically cut, and if they are not, they shall be side cut prior to placing of the second lane (cold longitudinal joints) or during work (transverse joints) at points of full course thickness.

Vertical surface at cold joints shall be well coated by binder in order to secure better bonding of the previous and the newly placed asphalt course.
The joints are coated with hot bitumen or appropriate bitumen mass in the quantity of approximately 50 g/m’ for one centimeter of asphalt course thickness.
With multi layered asphalt pavements the joints shall not overlap, but shall be distanced at least 150 mm. Longitudinal joint of completed course shall correspond to the road centerline. Traffic lanes shall not have longitudinal joints.

8.4 QUALITY ASSURANCE OF ASPHALT WORKS

Quality assurance of asphalt works is a number of activities described and explained in this GTR sub-section, with the final aim of reaching the set quality of pavement structure asphalt courses, in accordance with the GTR requirements.

There are two types of activities:

- Prior to execution of asphalt works, and
- During the execution of asphalt works.

8.4.1 Activities prior to execution of asphalt works

These works include:

- Preliminary testing of material usability
- Execution of asphalt mixture initial job mix
- Execution of confirmed job mix formula (confirmation of production)
- Execution of trial section (confirmation of placing), and
- Execution of program of quality assurance of material and works.

All the above mentioned activities are the responsibility of the Contractor who shall perform them at his expense prior to work execution. For each of the mentioned activities the Contractor shall give a separate document, in two copies, to the Client or his supervising engineer, who shall validate it by signature on the front page of the document. One copy of the signed document shall be returned to the Contractor and the other copy shall be kept by the Client of the supervising engineer.

Preliminary testing of material usability

The Contractor shall provide respective documentation on the usability of all materials to be used in the asphalt mixture production, in accordance with these GTR, and submit them to the supervising engineer for validation at least 30 days prior to start of works. The supervising engineer shall approve the preliminary usability testing within 10 days, or return them to the Contractor for additional testing.

Asphalt mixture initial job mix

Asphalt mixture initial job mix is made in the laboratory, according to the standard Marshall procedure. In addition to the asphalt mixture with optimal binder content, it is necessary to test at least two more asphalt mixtures for each level of binder content, i.e. with a smaller and a higher content of binder with an increment of 0.3% 8m/m) in relation to the optimal binder content. Trial laboratory samples are prepared at temperature equivalent to the bitumen binder temperature of 0,268 Pa, with the compacting energy of two times 50 hits, in accordance with the EN 12697-30 standard.

During the execution of initial job mix for asphalt mixtures intended for roads and highways of very heavy traffic load group, asphalt mixture shall be tested for resistance to permanent deformations

(standard EN 12697-22 and EN 12697-25) and resistance water influence (standard EN 12697-12).

The Contractor shall have an initial job mix for each kind of asphalt mixture defined by the pavement structure design and propose it to the Client or the supervising engineer for approval at least 20 days prior to start of works. The supervising engineer will approve the initial job mix within five days or return it to the Contractor for additional tests.

Report on the asphalt mixture initial job mix shall contain at least:

- General data on materials used,
- Percentages of particular type and/or fraction of component stone materials in asphalt mixture
- Percentage of binder in asphalt mixture
- Percentages of admixtures in asphalt mixture
- Densities of all component materials
- Grain size distribution of optimal stone mix
- Physical and mechanical properties of trial laboratory asphalt mixtures.

With the initial job mix, copies of the technical documentation on origin and quality of materials shall be submitted.
Without the documents on the usability of material, the initial job mix shall not be accepted. Initial job mix is valid maximum 3 years, and shall be renewed after the period.
Irrespective of the given time period, in case of change of any component materials regarding the origin and/or type of material, a new asphalt mixture initial job mix shall be made.

Asphalt mixture confirmed job mix formula

The execution of confirmed job mix formula includes the following:

- Checking the composition and properties of material stored on the asphalt production plant which shall be used in production of asphalt mixture in comparison with the composition and properties of material used for execution of initial job mix of asphalt mixture, and
- Checking the exactness and work of the batching plant and other parts of the asphalt plant.

Asphalt mixture production is considered confirmed when the mean value of the composition of at least three samples of asphalt mixture taken from the asphalt plant during a continuous production process (at least 50 tons), corresponds to the initial job mix within the allowed deviations defined for each type of asphalt mixture.
Mean value of asphalt mixture composition obtained in this way represents (is called) confirmed job mix formula.
Physical and mechanical properties of all samples shall correspond to the GTR requirements.

When all conditions are satisfied, Contractor shall produce a report on the confirmed job mix formula of asphalt mixture which contains:

- General part with data on the manufacturer and the asphalt production plant,
- Data on the testing of materials stored at the asphalt production plant,
- Basic data on the initial job mix formula of asphalt mixture,
- Individual laboratory test results of asphalt mixtures samples taken during production

tests,

- Evaluation of the mean value discrepancy of asphalt mixture composition from the preliminary composition value set on the basis of samples tested during production tests,
- Data on the asphalt mixture production plant and the production elements obtained at the production plant during production tests (opening and the working regime of the batching plant and feeders, separators, individual feeding of screened stone material fractions, proportioning of stone flour and bitumen, time of mixing, production capacity, temperatures of asphalt mixture, stone material an bitumen binder.

Apart from this data, the Contractor shall submit all notes on the calibration of each device at the asphalt mixture production plant, including the batching plant and separator of stone material, screen opening, scales and other devices for dozing of binders and admixtures as well as devices for measuring the temperature of stone material and binder.

Confirmed job mix formula produced in this way shall be submitted by the Contractor to the Client or his supervising engineer for approval, at least 15 days prior to start of works.

If a trial section is not planned, this confirmed job mix formula shall be considered as contracted (confirmed) job mix formula after it is accepted by the Client, i.e. his supervising engineer, and shall be used as basis for approval of a continuous production and placing of asphalt, as well as evaluation of the quality of placed material and works, on the basis of current and audit testing according to GTR.

Initial job mix formula shall be repeated if the existing initial job mix formula can not be proven at the asphalt production plant due to major differences in the composition and/or properties of materials stored at the production plant and/or due to some characteristics of the production plant itself.

Confirmed job mix formula shall be repeated at least once every 12 months, after an overhaul of the plant or after repair of any component parts of the production plant which caused longer interruption of the production process, and which can significantly influence the asphalt mixture composition.

Requirements of the confirmed job mix formula for BBC and BBWC

Confirmed job mix formula of asphalt mixture is valid when:

- The grain size distribution of stone mix of at least three samples of asphalt mixture is within the range of allowed deviations from the initial job mix formula of asphalt mixture given in table below.
- The percentage of bitumen in each sample does not differ more than ± 0,3 % (m/m) from the percentage given in the initial composition of asphalt mixture, and
- Physical and mechanical properties of all samples satisfy the requirements given.

Square screen openings, mm	Allowed deviations of the grain size distribution of stone mix*			
	For each sample, %(m/m)		For mean values %(m/m)	
	Asphalt mixtures for highways 2,0	Other asphalt mixtures	Asphalt mixtures for highways 1,0	Other asphalt mixtures
0,09	2,0	2,0	1,2	1,2
0,25	3,0	3,0	1,7	1,4
0,71	4,0	4,0	2,3	2,0
2,0	5,0	5,0	3,0	2,5
4,0	5,0	6,0	3,5	3,2
8,0	6,0	6,0	3,5	3,7
11,2	6,0	7,0	3,5	4,0
16,0	6,0	7,0	3,5	4,0
22,4	6,0	7,0	3,5	4,0
31,5		7,0		4,0

Table 56 – Allowed deviations of the grain size distribution of stone mix of asphalt mixture samples in relation to the initial job mix formula for BBC and BBWC

Total allowed deviation on each screen shall not be greater than the limit values on that screen for particular type of asphalt mixture given for BBC.

Table 57 – Allowed deviation of the obtained mean value of bitumen percentage in the asphalt mixture sample from the percentage of bitumen defined in the initial job mix formula of asphalt mixture for BBC, BBWC, TC, WC –AC, depending on the number of tested samples.

Property	Number of tested samples					
	1	2	3 do 4	5 do 8	9 do 19	≥ 20
Allowed deviation, %(m/m)	0,50	0,45	0,40	0,35	0,30	0,25

Allowed deviation of the grain size distribution and percentage of binder are valid for the quality evaluation of asphalt mixture for BBC and BBWC on the basis of implemented control testing and audit testing.

Requirements of the confirmed job mix formula for tack coat (TC) and wearing course (WC)

Confirmed job mix formula of asphalt mixture is valid when:

- The grain size distribution of stone mix of at least three samples of asphalt mixture is within the range of allowed deviations from the initial job mix formula of asphalt mixture.
- The percentage of bitumen in each sample does not differ more than ± 0,3 % (m/m) from the percentage given in the initial composition of asphalt mixture, and
- Physical and mechanical properties of all samples satisfy the requirements.

Table 58 – Allowed deviations of the grain size distribution of stone mix of asphalt mixture samples in relation to the initial job mix formula for TC and WC-AC.

Square screen openings, mm	Allowed deviations of the grain size distribution of stone mix*			
	For each sample %(m/m)		For mean value %(m/m)	
	Asphalt mixtures for highways 1,5	Other asphalt mixtures	Asphalt mixtures for highways	Other asphalt mixtures
0,09	2,0	2,0	1,0	1,0
0,25	3,0	3,0	1,2	1,2
0,71	4,0	4,0	1,7	1,7
2,0	4,0	5,0	2,3	2,3
4,0	5,0	5,0	3,0	3,0
8,0	5,0	6,0	3,0	3,5
11,2	5,0	6,0	3,0	3,5
16,0		6,0	3,0	3,5

* total allowed deviation at each screen shall not be greater than the limit values

Allowed deviations of the percentage of binder and the grain size distribution of the mixture given in tables 50 and 51 are valid for the quality evaluation of asphalt mixture for tack coat (TC) and asphalt concrete wearing course (AC- WC) on the basis of control testing and audit testing.

Requirements of the confirmed job mix formula for the wearing course made of splitmastic asphalt (WC-SMA)

Confirmed job mix formula of asphalt mixture is valid when:

- The grain size distribution of stone mix of at least three samples of asphalt mixture is within the range of allowed deviations from the initial job mix formula of asphalt mixture given in table below.
- The percentage of bitumen in each sample does not differ more than ± 0,2 % (m/m) from the percentage given in the initial composition of asphalt mixture, and
- Physical and mechanical properties of all samples satisfy the requirements.

Allowed deviations of the percentage of binder and the grain size distribution of the mixture given in tables below are valid for the quality evaluation of asphalt mixture for WC-SMA on the basis of control testing and audit testing.

Square screen openings, mm	Allowed deviations of the stone mix grain size distribution*	
	For each sample, % (m/m)	For mean value, % (m/m)
0,09	1,5	1,0
0,25	2,0	1,2
0,71	3,0	1,7
2,0	3,0	1,7
4,0	3,0	2,0
8,0	3,0	2,0
11,2	3,0	2,0

Table 59 – Allowed deviations of the grain size distribution of stone mix of asphalt mixture samples in relation to the initial job mix formula for WC-SMA.

* Total allowed deviation at each screen shall not be greater than the limit values for that screen for each type of asphalt mixture for WC-SMA given, in table below:

Property	Number of tested samples					
	1	2	3 do 4	5 do 8	9 do 19	≥ 20
Allowed deviation, %(*m*/*m*)	0,30	0,25	0,20	0,18	0,15	0,13

Table 60 – Allowed deviation of the obtained mean value of bitumen percentage in asphalt mixture sample from the percentage of bitumen defined in the initial job mix formula of asphalt mixture for WC-SMA depending on the number of tested samples.

Trial section

Trial section is evidence that an asphalt layer of quality set in the GTR can be executed with an asphalt mixture produced according to the confirmed job mix formula. A trial section is used for highways and roads of very heavy traffic load group, minimum length 300 m

Place and length of the trial section, machines used for its execution, regime of placing of asphalt mixture and the schedule of asphalt course compaction by rolling is proposed by the Contractor in written form and approved by the supervising engineer.

The Contractor shall test the following on the trial section:

- Asphalt mixture temperature during loading into the finisher from every delivery,
- Composition and the physical and mechanical properties of asphalt mixture on at least three samples
- Change in the rate of compaction of the asphalt course by non-destructive method during placing and on cooled asphalt course at six points minimum,
- Rate of compaction, percentage of voids, thickness of executed course and the adhesive binder strength with the base, on at least three original samples,
- Evenness of each traffic lane in the full trial section length,
- Adhesion (for wearing courses) on at least three points.

All places of sampling and testing shall be decided by the supervising engineer.

An authorized body, executing audit testing on the subject structure, shall test the following on the trial section:

- Composition and physical and mechanical properties of asphalt mixture on at least on parallel sample,
- Rate of compaction, percentage of voids and thickness of executes asphalt course on original samples previously tested by the Contractor.

On the basis of the laboratory tests and field surveys, the Contractor shall produce a report about the trial section, containing the following information:

Part I – General information

- Structure, Contractor and Client,

- description of trial section,
- list of certificates and other evidence on the usability of materials.

Part II – evidence on the asphalt mixture production (contracted confirmed job mix formula)

- production capacity of asphalt production plant,
- description of the means of transport of asphalt mixture,
- asphalt mixture temperatures at the time of placing,
- laboratory results on the testing of composition and properties of produced asphalt mixture,
- evaluation of the test results of the composition and properties of asphalt mixture in relation to the initial job mix formula.

On the basis of the test results evaluation, the mean value of the composition and the physical and mechanical properties of tested samples of produced and placed asphalt mixture represents the confirmed job mix formula of asphalt mixture.

According to the confirmed job mix formula the quality of produced asphalt mixture is evaluated on the basis of control testing and audit testing:

Part III – evidence on execution of asphalt mixture:

- description of the working regime of the finishers,
- description of the working regime of rollers,
- test results on the rate of compaction, percentage of voids and the thickness of the course,
- test results of the evenness and adhesion of the course.

In case when the results of tests performed by an authorized laboratory are compatible with the results given in the trial section report, the supervising engineer shall sign the Contractor's trial section report and approve the start of continuous production and placing of the mixture.

If the quality parameters of asphalt mixture and the placed asphalt course on the trial section are not in accordance with the quality requirements given in these

GTR, the Contractor shall execute a new trial section and shall repair the previous at his expense.

Quality control program of materials and works

Program of quality control of materials and works shall be performed by the Contractor and approved by the Client.

Program of quality control of materials and works includes:

- design name and designation,
- name of structure,
- name of the work stage,
- location of the asphalt production plant with a location sketch,
- description of asphalt production plant with the daily asphalt production and placing capacity,
- list of documents on the implemented test procedures of measuring instruments on the asphalt production plant, including the description of the test procedures during the duration of a specific project,

- description of test procedure of the accuracy of main devices on the asphalt plant (batching plant, drying, dusting screening, dozing of all components),
- planned number and capacity of truck for asphalt mixture transport,
- description of machines for placing of asphalt mixture,
- location and description of laboratory,
- description of equipment for laboratory and field testing,
- description of the way of sampling of component materials and asphalt,
- means of implementation of corrections during the production process and placing of asphalt in case of noncompliance with the GTR.
- Time of completion of laboratory and field testing and the way of documenting the test results,
- Period and way of submission of test results to the supervising engineer,
- List of technical staff in charge of this program, with detailed description of duties and responsibilities,
- Name, surname and signature of person responsible for the implementation of this program.

Program of quality control of materials and works shall be submitted by the Contractor to the supervising engineer for approval at least 10 days prior to start of works.

8.4.2 ACTIVITIES DURING THE EXECUTION OF ASPHALT WORKS

This sub-section defines the activities of the Client and Contractor during construction works, for the purpose of quality assurance of asphalt works.

These activities are:

- Control testing as the responsibility of the Contractor, and
- Audit testing as the responsibility of the Client.

8.4.3 CONTROL TESTING

Control testing is performed by the Contractor, in a manner that assures the possibility of quick and efficient intervention in the production process. In case the Contractor does not have adequate equipment and staff, control testing shall be performed an authorized laboratory at the Contractor's expense.
The Contractor shall keep written record on the test results performed during control testing, which shall be available to the supervising engineer.

Control testing includes the following:

- Control of the quality of component materials for production of asphalt mixtures,
- Control of produced asphalt mixture,
- Control of placed asphalt mixture.

Control testing of component materials for asphalt mixture

When taking over materials from the manufactures of supplier, the Contractor shall check the type and quality of taken over material by appropriate audit tests, and submit the evidence on quality to the supervising engineer.

(a) Stone grit and separated or partially separated stone material

The following is tested at least once a day during delivery:

- Grain size distribution EN 933-1
- percentage of particles smaller than 0,09 mm

At least once for the quantity of material needed for production of 4000 tons of asphalt mixture for base course or tack coat, i.e. 2000 tons for the wearing course, the following is tested on each fraction:

- density EN 1097-6
- grain shape EN 933-4
- percentage of weathered –low quality grains
- percentage of organic substances
- percentage of clay balls
- percentage of crushed grains EN 933-5

(for crushed gravel and scree only)

(b) Crushed and natural sand

At least once a day during delivery the following is tested:

- Grain size distribution EN 933-1
- Grain size modulus
- Percentage of particles smaller than 0,09 mm

(c) Stone flour and return stone flour

At every second delivery of industrial stone flour and at least once a day, if return filler is used, the following is tested:

- Grain size distribution EN 933-10

(d) Bitumen

At least once for the quantity of bitumen needed for production of 4000 tons of asphalt mixture for base course or tack coat, i.e. 2000 tons for the wearing course, the following is tested:

- Softening point EN 1427
- Penetration EN 1426
- Density EN ISO 3838

(e) Polymer modified bitumen (PmB)

At least once for the quantity of polymer modified bitumen needed for production of 4000 tons of asphalt mixture for base course or tack coat, i.e. 2000 tons for the wearing course, the following is tested:

- Softening point EN 1427
- Penetration EN 1426
- Density EN ISO 3838

- Elasticity EN 13398

(f) Bitumen emulsion for bonding of courses

At every second delivery at least the following is tested:

- Viscosity EN 12846
- percentage of bitumen EN 1428

(g) Polymer emulsion for bonding

At every second delivery, at least the following is tested:

- viscosity (STV-apparatus) EN 12846
- percentage of binder EN 1428

(h) Polymer emulsion for micro-asphalt and surface dressing

At every second delivery at least the following is tested:

- type of charge EN 1430
- viscosity (STV-apparatus) EN 12846
- percentage of binder EN 1428

(i) Polymer modified bitumen for surface dressing

At every second delivery at least the following is tested:

- softening point EN 1427
- penetration EN 1426
- elasticity EN 13398

Control testing of produced asphalt mixture

As part of the control testing process the Contractor shall check and record the temperature of produced asphalt mixture in accordance with the EN 12697-13 standard, at least every hour during daily production.

The Contractor shall submit reports and notes on control testing which refer to the daily production of asphalt mixture to the supervising engineer within two days after the conducted control.

Asphalt mixture is sampled according to the EN 12697-27 standard, and for testing it is prepared according to the EN 12697- 28 standard.

(a) Composition of asphalt mixture

The following is tested:

- Percentage of bitumen EN 12697-1
- Grain size distribution of extracted stone component EN 12697-2.

(b) Physical and mechanical properties of asphalt mixture for rolled asphalt

The following is tested, i.e. the following properties are determined:

- Stability at 60 °C — EN 12697-34
- Deformation at 60 °C — EN 12697-34
- Volume mass of asphalt sample — EN 12697-6
- Asphalt mixture density — EN 12697-5
- Percentage of voids — EN 12697-8
- Extent of filling of stone mixture voids by bitumen

(c) Physical and mechanical properties of asphalt mixture for poured asphalt

The following is tested:

- Depth of sinking — EN 12697-20
- Increase in depth of sinking — EN 12697-20

(d) Physical and mechanical properties of asphalt mixture for mastic asphalt

The following is tested:

- Softening point according to Wilhelm

Control testing of asphalt mixture placing

The following is tested during the placing of asphalt course:

- Asphalt mixture temperature,
- Degree of compaction of placed asphalt mixture by non-destructive method[9],
- Thickness of course,
- Bonding of courses,
- Evenness of course,
- Height of course,
- Cross fall of course,
- Position of course.

[9] Reference values of volume mass is the mean value of volume mass of asphalt mixture samples within control testing, samples according to Marshall, taken from the complete daily production, i.e. from the complete quantity of asphalt of tested unit surface.

After the course has been placed, the contractor shall make an geodetic survey of the complete course according to position and elevation. Characteristic point are surveyed in the cross section, at every 50 m: centerline, left edge and right course edge.

Report on control testing

When the report is placed, all activities as well as results of conducted testing as part of the control testing shall be presented in a written containing the following:

- General part with information on the structure, Contractor and Client,
- Information on the scope of control testing as given in the GTR,

- Information on the performed scope of control testing
- Results of control testing,
- Comment on all activities conducted as part of the control testing of materials used, production process and placing of the asphalt mixture, and
- Comment on the quality of executed works with respect to the GTR requirements,

8.4.4 AUDIT TESTING

Audit testing shall be performed by the Client or by an authorized laboratory, at the Client's expense.
Audit testing includes the quality of works implemented and materials used in relation to the quality set in the GTR.
On the basis of control testing and audit testing, the Client, i.e. his supervising engineer shall make the final quality evaluation of executed asphalt courses.
In case the test results show deviations from the set quality level, the Contractor shall, with the approval of the supervising engineer, ask for additional sampling at his expense in order to localize the asphalt surface (quantity) of insufficient quality.
Depending on the degree of deviations, the supervising engineer, with the approval of the designer shall make the decision whether the placed course should be improved, or if the deviations are such that the placed course can be accepted with a deduction from the contracted price, in accordance with the requirements given in these GTR.
In case of doubt in the quality of placed asphalt course, additional samples can be tested at the request of the supervising engineer. If additional tests prove deviations from the required quality, additional testing shall be at the expense of the Contractor.
In case there is no deviations from the required quality, additional testing shall be at the expense of the Client.

Surface of the placed course localized by additional sample taking shall be evaluated according to these GTR (for certain quality parameters), and the quality evaluation shall be given on the basis of individual test result values of samples taken at that surface. The price does not include test results of samples with defined limits of localized surface.
The Contractor shall, at his expense, repair all places on the asphalt course damaged by quality control sample taking.

Audit testing includes the following activities:

- Testing the quality of component materials,
- Testing the quality of produced asphalt mixture, and
- Testing the quality of placed asphalt course.

The supervising engineer, can request additional testing of the quality f component materials for asphalt mixture production which shall be done as part of control testing.
If deviations from the required quality are found, costs of these test shall be at the expense of the Contractor.

Audit testing of component materials for asphalt mixture production

(a) Stone grit, separated and partially separated stone material

The following is tested at least once for the quantity needed to produce 15000 tons of asphalt mixture for base course, i.e. tack coat, or 10000 tons for the wearing course, or for the quantity of material needed to produce 50000 m^2 of micro-asphalt or surface dressing:

- Grain size distribution EN 933-1
- Percentage of particles smaller than0,09 mm
- Density EN 1097-6
- Grain shape EN 933-4
- Percentage of weak/friable grains
- Percentage of clay balls
- Percentage of organic impurities
- Water absorption EN 1097-6
- Resistance to Na_2SO_4 [10] EN 1367-2
- Resistance to crushing and wear EN 1097-2
- Percentage of crushed grains (for crushed gravel and scree only)

(b) Crushed and natural sand

The following is tested at least once for the quantity needed to produce 15000 tons of asphalt mixture for base course i.e. tack coat, or 10000 tons for the wearing course, or for the quantity of material needed to produce 50000 m^2 of micro-asphalt:

- Grain size distribution EN 933-1
- Grain size modulus
- Percentage of particles smaller than 0,09 mm
- Density EN 1097-6
- Sand equivalent EN 933-8.

(c) Stone flour and return stone flour

The following is tested at least once for the quantity needed to produce 15000 tons of asphalt mixture for base course or tack coat, or 10000 tons for the wearing course:

- Grain size distribution EN 933-10
- Percentage of moisture
- Filler purity
- Percentage of voids in dry compacted state EN 1097-4
- Filler density EN 1097-7

(d) Bitumen

The following is tested at least once for the quantity of bitumen needed to produce 15000 tons of asphalt mixture for base course or tack coat, or 10000 tons for the wearing course:

- Penetration EN 1426
- Softening point (PK) EN 1427
- Penetration index EN 12591
- Ductility

- Breaking point according to Fraass EN 12593
- Density EN ISO 3838
- Change of properties by heating to 163 °C EN 12607-1
- Paraffin number EN 12606-1
- Flash point ISO 2592
- Percentage of soluble particles EN 12592.

(e) Polymer modified bitumen (PmB)

The following is tested at least once for the quantity of polymer bitumen needed to produce 15000 tons of asphalt mixture for base course or tack coat, or 10000 tons for the wearing course:

- Penetration EN 1426
- Softening point (PK) EN 1427
- Breaking point according to Fraass EN 12593
- Elasticity EN 13398
- Density EN ISO 3838
- Storage stability EN 13399
- Flash point ISO 2592
- Change of property during aging EN 12607-1 or EN 12607-3.

(f) Bitumen emulsion for bonding

The following is tested at least once for the surface covered by 15 000 tons of asphalt mixture for base course or tack coat, i.e. 10000 tons for wearing course:

- Viscosity
- Percentage of binder EN 1428
- Degree of stability EN 13075-1
- Homogeneity EN 1429
- Stability during storage and Behavior of bitumen film under water EN 13614-2.

(g) Polymer emulsion for bonding

The following is tested at least once for the surface covered by 15 000 tons of asphalt mixture for base course or tack coat, i.e. 10000 tons for wearing course:

- Percentage of binder EN 1428
- Viscosity EN 12846
- Storage stability EN 1429
- softening point of extracted binder and EN 13398
- elasticity of extracted binder and EN 13398.

(h) Polymer emulsion for micro-asphalt and surface dressing

The following is tested at least once for the quantity of polymer emulsion needed for execution of 50000 m^2 of micro-asphalt or surface dressing:

- Type of charge EN 1430
- Percentage of binder EN 1428
- Residue on screen EN 1429
- Storage stability EN 1429

- Viscosity EN 12846
- Stability during breaking DIN 52047-1
- Adhesiveness DIN 52006-1
- Softening point of extracted binder EN 1427
- Breaking point of extracted binder according to Fraass EN 12593
- Elasticity of extracted binder EN 13398.

(i) Polymer modified bitumen for surface dressing

The following is tested at least once for the quantity of polymer modified bitumen needed for execution of 50000 m^2 of surface dressing:

- Penetration EN 1426
- Softening point (PK) EN 1427
- Breaking point according to Fraass EN 12593
- Elasticity EN 13398
- Density EN ISO 3838
- Storage stability EN 13399
- Flash point ISO 2592
- Change of properties after aging EN 12607-1 or EN 12607-3.

Audit testing of produced asphalt mixture

Asphalt mixture is sampled according to the EN 12697-27 standard, and preparation for sampling is done according to the EN 12697-28 standard.

(a) Composition of asphalt mixture

The following is tested:

- Percentage of bitumen EN 12697-1
- Grain size distribution of extracted stone mix EN 12697-2.

(b) Physical and mechanical properties of asphalt mixture for rolled asphalt

The following is tested:

- Stability at 60 ° C, EN 12697-34
- Deformations at 60 ° C, EN 12697-34
- Volume mass of asphalt sample EN 12697-6
- Density of asphalt mixture EN 12697-5
- Percentage of voids EN 12697-8
- Filling of stone mix voids with bitumen

Change of properties of asphalt mixture bitumen binder for wearing course shall be checked by testing the softening point and penetration of extracted binder.

(c) Physical and mechanical properties of asphalt mix for poured asphalt

The following is tested:

- Depth of sinking EN 12697-20
- Increase in depth of sinking EN 12697-20
- Softening point of extracted bitumen EN 1427
- Penetration of extracted bitumen EN 1426
- Breaking point of extracted bitumen according to Fraass EN 12593.

(d) Physical and mechanical properties of asphalt mixture for mastic asphalt

The following is tested:

- Softening point according to Wilhelm
- Softening point of extracted bitumen EN 1427
- Penetration of extracted bitumen EN 1426
- Breaking point of extracted bitumen according to Fraass EN 12593.

Audit testing of placed asphalt course

Within the audit testing, when sampling the asphalt mixture,temperature of asphalt mixture on the site is tested and recorded, in accordance with the standard
EN 12697-13.

The following is tested during placing of asphalt course:

Rate of compaction[11] Determined from the relation of volume mass of placed asphalt and the volume mass of laboratory prepared asphalt sample.

Percentage of voids[12], : Determined from the relation of volume mass of placed asphalt and apparent of asphalt mixture.

Thickness of the course: Determined by original samples taken from the pavement.

Evenness of the course. Placed course is divided on measuring sections in alternative order at least 0,75 m from the road edge. Measuring instrument that expresses evenness in an IRI $_{(100)}$ index is used (length of measuring section is 100 m). A measuring staff can also be used , length 3 m (standard or rolling), in accordance with the EN 13036-7 standard, and in this case the length of one measuring section is 500 m.

Height of the course, cross fall and position: measured by respective geodetic equipment.

Adhesiveness of the course: Measured with a SCRIM apparatus (blocked and pulled roller) or with a pendulum apparatus, and by measuring the depth of the texture with sand patch test (EN 13036-4)

Bonding of courses: tested on original samples of asphalt by method according to ALPA – StB, part 4.

Audit testing report

Report on conducted audit testing includes the following:

- General part with the information on the Client, Contractor and structure,
- Information on the required scope of audit testing according to the Gtr,
- Information on the scope of conducted audit testing,
- Results of audit testing,
- Explanation of all activities undertaken during control of used materials, production and placing of asphalt mixture, and
- Expert opinion on the quality of placed asphalt course with respect to the quality requirements according to the GTR.

---

[11]when the original sample was not taken at the sampling place, the reference value of volume mass is the mean value of volume mass of samples according to Marshall, of all asphalt mixture samples during control testing and audit testing, from the complete daily production, i.e. the complete quantity of asphalt of tested unit surface..

[12]when the original sample was not taken at the sampling place, reference value of apparent density is the mean value of apparent density from all asphalt mixture samples during control testing and audit testing, from the complete daily production , i.e. from the quantity of asphalt of tested unit surface.

8.4.5 DOCUMENTATION

Technical documentation on the activities of quality control of executed structure, necessary for technical inspection, consists of the following:

Certification on conformity and evidence on usability of all materials used in production of asphalt mixture:

- Initial job mix formula for each used type of asphalt mixture,
- Confirmed job mix formula for each type of used asphalt mixture, for every used asphalt production plant,
- Contracted job mix formula with report on trial section results,
- Report on control testing,
- Report on audit testing.

8.4.6 EVALUATION OF ASPHALT QUALITY

The main aim of all activities undertaken to evaluate the quality is to reach the most realistic, objective and reliable picture on the quality of produced and placed asphalt mixture, and to evaluate the executed asphalt works on the basis of results on the reached quality. Namely, it would not be correct from the technical or the economic standpoint to proclaim asphalt which

deviates in some properties from the set quality requirements to proclaim unfit. It would be more correct in such cases to evaluate the asphalt works in stages, depending on the degree of deviation from the set quality requirements.

Final quality evaluation shall be done by the Client or the supervising engineer, on the basis of audit testing results. The final quality evaluation depends on the following:

- Quality evaluation of produced asphalt mixture, and
- Quality evaluation of placed asphalt course.

8.4.7 QUALITY EVALUATION OF PRODUCED ASPHALT MIXTURE

Quality evaluation of produced asphalt mixture is made on the basis of audit testing results of percentage of binder in the asphalt mixture.

Quality evaluation is usually made on the basis of mean result values of laboratory tests, except in case of smaller scope of work, when there are less than three individual results. In that case the quality evaluation is made on the basis of individual audit test results, as well as in other exceptions given in the text bellow

Mean value of individual audit test results of bitumen content, depending on the number of tested samples, shall not deviate from the value required in these GTR.

If the mean value deviates from the required more than given in the tables above, the respective quantity of produced asphalt mixture (asphalt course) is evaluated according to formulas (1) and (2).

Note 1: In order to reach the best possible compatibility of the mean value of bitumen content with the quantity required according to the confirmed job mix formula, individual values shall not deviate from the required for more than ± 0,5
% (m/m). Individual results deviating more than ± 0,5% (m/m) shall not be considered in the mean value calculation, and the quality of respective asphalt mixture quantity shall be evaluated according to the formulas (1) and (2).

$$O = (P/100) * C * G \quad (1)$$

$$O = (P/100) * C * F, \quad (2)$$

Where:

O – deduction from the contracted price (kn), P – deduction from the contracted price (%), C – contracted unit price (kn/t) or (kn/m^2),
G – relevant quantity for deduction (t), F – relevant surface for deduction (m^2).

Value P in formulas (1) i (2) is calculated according to the following:

a) when evaluation is made on the basis of mean value

$P = [5 \bullet p/(0,5 - d)]^2$; (3)

b) when evaluation is made on the basis of individual values

$P = p^2 \bullet 100$, (4)

Where:

d – limits of allowed deviations,
p – extent of exceeding the limit of allowed deviations

Asphalt mixture for which the audit testing shows such percentage of binder that the application of formula (3) and (4) gives values P greater than 25%, shall not be accepted.

Quality evaluation of placed asphalt course.

Quality evaluation of placed asphalt course is made on the basis or the audit testing results of the thickness, percentage of voids and evenness[13] of the placed course.

Thickness of the placed asphalt course

Thickness of the course is determined by the samples taken from the placed asphalt course. Thickness is measured at four places for each sample, turned one toward the other at an angle of 90°
Arithmetic mean value of four individual samples is taken as the test results, rounded to 1 mm. Test result represents the thickness of the course on the executed surface for the relevant sample.

Final evaluation of the quality of placed course, with respect to its thickness, is made on the basis of individual thickness test results and on the basis of mean values of thickness of the course on the executed section.

Calculations for deduction from the contracted price, due to decreased quality is done in two stages.

On the first stage, on the basis of test results of the course thickness, the so-called thickness for calculation is calculated, which serves for calculation of the corrected unit prices for each type of course. After that, in the second stage the test results are compared with the set quality requirements, deductions are calculated but not on the basis of contracted but on the basis of corrected unit price.

Determining the corrected unit price

The corrected unit price is determined separately for each executed course, on the basis of the mean thickness value of each course (Note 3).

Note 2:For calculation of the mean value of course thickness, all individual test results are taken, except those which deviate from the designed thickness more than +20%. Such results are taken into the mean value calculation as if they deviate from the designed thickness +20% (e.g. if the

designed thickness is 50 mm, and the individual thickness test result is 62 mm, this result is not taken into the mean value, but this one: 50 x 1,20 = 60 mm).

On the basis of calculated mean thickness values of courses, the thickness for calculation is obtained, and after that the corrected unit prices for each course separately.

[13] Only for wearing course

Thickness for calculation of the wearing course (WC-AB or WC-SMA) i.e. bitumen base-wearing course (BBWC) is equal to the mean value of the individual test results of the wearing course thickness (Note 2).

Thickness for calculation of the bitumen base course (BBC) is calculated so that the sum of the thickness for calculation and the designed thickness of the tack coat is deducted from the sum of mean values of the wearing course thickness, the tack coat and the base course thickness.

Note 3: Thickness for calculation of any course shall not be greater than the designed thickness. If calculations produce such results, then the designed thickness is taken as the thickness for calculation for tha course.

Corrected unit prices for individual coursed are calculated according to the following formula:

$$C' = C * \frac{D'}{D_p}$$

where:

C' - corrected unit price, C
- contracted unit price,
D' - thickness for calculation
D_p – designed course thickness,

Deduction due to decreased quality

Possible deductions due to decreased quality caused by the decreased thickness of placed courses shall not calculated on the basis of thickness of individual courses but on the basis of the sum of the thickness of individual courses..

The following thickness are taken into account when calculating deductions:

- Wearing course thickness (W),
- Thickness of wearing + tack coat (W + T),
- Thickness of wearing+ tack coat+base courses (W + T +B).

Quality evaluation of the asphalt part of the pavement structure is made on the basis of individual test results and on the basis of the mean values of determined thickness.

Allowed deviations of individual and mean values from the ones required by the design are given in table below:

Course	Allowed deviation of placed course thickness		
	Individual results		Mean value
	Lower limit (%)	Highest limit (%)	Lower limit (%)
Wearing	-15	+20	-5
Wearing + tack coat	-15	+20	-5
Wearing + tack + base course	-15	+20	-5

Table 61 - Allowed deviations of the placed course thickness from the designed thickness

Deductions due to the decreased quality caused by the decreased thickness of placed course are calculated as follows:

$$O = \frac{P^2}{100} * 0.3 * C' * F$$

$$p = \frac{D_{min.} - D_{izv.}}{D^p} * 100$$

Where:
O - deductions (kn),
p - deviation (%),
$D_{min.}$ - lowest thickness according to table 6-00.5-1,
$D_{izv.}$ - actual executed thickness (mm),
D_p - designed thickness (mm),
C' - corrected unit price (kn/m^2),
F -surface to which the deduction refers.

When evaluation is made on the basis of individual test results, amount from previous formulas have these values:

- For wearing course $D_{min}=D_p \cdot 0.85$
- For wearing course +tack coat $D_{min}=D_p \cdot 0.90$
- For wearing course + tack coat + base course $D_{min}=D_p \cdot 0.90$

$D_{izv.}$ Is the individual test result and, F is the surface represented by the tested sample.

When evaluation is made on the basis of mean values of individual test results, values for $D_{min.}$ are calculated for all courses in the same manner, i.e.. $D_{min.} = D_p \cdot 0,95$, and F, the surface to which the deduction refers, is the total executed surface.

$D_{izv.}$ Is in that case equal to the mean value of individual test results (Note 2). Corrected unit

price C' is calculated , depending on the course,, as follows:

- For wearing course $C'_H=C'_H$
- For wearing + BBC $C'_{H+V} = C'_H+ C'_V$
- For wearing + BBC + DBBC $C'_{H+V+N} =C'_H+ C'_V+ C'_N$

Where C'_H C'_V C'_N are the corrected unit prices for the wearing, tack coat, and base course , calculated in the way described in these GTR.

After the deductions have been calculated on the basis of individual test results and their mean values, the amounts of calculated deductions shall be compared and only one of the calculated values deducted, the higher one. If the courses have been executed as defined in this sub-item, in the thickness equal to or greater than the one given in the design, there shall be no deductions.

Percentage of voids in the placed asphalt course

Quality evaluation of the placed course with respect to the percentage of voids shall be made for each executed course, on the basis of individual test results and on the basis of mean values of the percentage of voids in the executed course.

Individual results for determining the percentage of voids in the placed course, which exceed the upper limits set by these GTR by more than 10% of their value, shall not be taken into the mean value calculation of the percentage of voids in the executed course. Such results shall be evaluated according to the criteria for evaluation according to the individual test results. Deductions due to decreased quality as a result of the percentage of voids in the executed course are calculated as follows:

$$O = \frac{P^2}{100} * C' * F$$

where:
O - deductions from the contracted unit price (kn),
C' - corrected unit price,
F - surface to which the deductions refer (m^2),
p - deviation from allowed limits (%(*V/V*)).

When calculating the deductions on the basis of the mean value of voids in the executed course, the allowed limits are identical to the scope for the percentage of voids set by these GTR.

When calculating the deductions on the basis of individual test results of the percentage of voids in the executed course, the allowed limits shall be obtained in a manner that the upper limit of the scope set by these GTR is increased by 10% of its value.

After the deductions have been calculated on the basis of individual test results and on the basis of their mean value, the amounts of calculated deductions shall be compared and only one calculated value, the higher one, shall be deducted.

Evenness of the placed course

Evaluation of the evenness of the placed course shall be made on the basis of the mean IRI_{500} index value on the measuring section 500 m long, which consists of 5 IRI_{100} indexes, within the audit testing of the placed asphalt course.

If the mean value of the IRI_{500} index on a section 500 m long exceeds the allowed values by more than 0,1 m/km, than the evenness of the subject section is measured in full length of two longitudinal profiles. If the obtained mean value of the IRI_{500} index deviates from the set value increased by 0,1 m/km, the contracted price shall be decreased according to the table below.

Category of evenness	Traffic load group				Deduction from corrected unit price %
	Highway	Very heavy and heavy	Medium	Light and very light	
A-IRI_{500}	1,1 do 1,2	1,6 do 1,7	2,1 do 2,2	2,6 do 2,7	5
B-IRI_{500}	1,2 do 1,3	1,7 do 1,8	2,2 do 2,3	2,7 do 2,8	10
C-IRI_{500}	1,3 do 1,4	1,8 do 1,9	2,3 do 2,4	2,8 do 2,9	20
D-IRI_{500}	1,4 do 1,5	1,9 do 2,0	2,4 do 2,5	2,9 do 3,0	40
E-IRI_{500}	> 1,5	> 2,0	> 2,5	> 3,0	100

Table 62 - Deductions due to the unevenness of the wearing course depending on the traffic load

If the mean value of the IRI_{500} index corresponds to the categories of evenness from A to D, and the mean IRI_{100} index value is in the E category, the subject sub- section shall not be paid to the Contractor 100 m long. Depending on the amount of deviation, the supervising engineer can request a change of the course.

8.5 BITUMEN TACK COAT FOR BONDING OF ASPHALT LAYERS

8.5.1 DESCRIPTION

Bitumen tack coat for intermediate bonding of asphalt layers is a thin layer of bitumen obtained from bitumen emulsion or hot bitumen by spraying. It is a part of preparatory works of road base for execution of pavement structure asphalt courses.

8.5.2 BITUMEN EMULSION QUALITY REQUIREMENTS

Previously executed asphalt layer is sprayed with semi-stable anion or cationic bitumen emulsion, depending on the type of stone material used and the weather conditions prevailing. If the asphalt courses are made of asphalt mixture produced from polymer modified bitumen, asphalt base shall be sprayed with semi-stable or unstable cationic polymer emulsion.

Quality of bitumen emulsion shall be in accordance with the requirements given in these GTR.

8.5.3 WORKS

Course executed on the basis of bitumen binders shall be sprayed with bitumen emulsion in the quantity ranging from 0,15 to 0, 35 kg/m^2, depending on the contamination and wearing out of the road base.

The road base can also be sprayed by hot bitumen in stead of bitumen emulsion, in the quantity from0,1 to 0,2 kg/m^2.

Spraying of bitumen emulsion or hot bitumen shall only be done by motor sprayers, which enable an unified distribution of bitumen emulsion across the surface. Manual spraying is not allowed, except at places that are not reachable by motor sprayers, with the approval of the supervising engineer.

Before spraying with bitumen emulsion, the surface shall be clean and dry. Spraying of course executed on the basis of bitumen binders shall not be sprayed by bitumen emulsion during rainy weather, i.e. at relative air humidity of 75% , at temperature of air and road base lower than 5°C.

8.5.4 QUALITY CONTROL

Control testing

During the execution of pavement structure asphalt courses, the Contractor shall maintain control testing of bitumen emulsion in accordance with these GTR.

8.5.5 AUDIT TESTING

During the execution of pavement structure asphalt courses, audit testing of bitumen emulsion shall be conducted in accordance with these GTR.

8.5.6 CALCULATION OF WORK

Spraying of pavement structure asphalt courses with bitumen emulsion is measured in square meters of actually sprayed surface, in accordance with the design details and is calculates in square meters of sprayed surface.

The price includes all costs of material supply, transport, equipment and everything needed for execution of work

8.6 BONDING LAYER

8.6.1 DESCRIPTION

Bonding layer (BL) in the pavement structure is found between the base course and the wearing course, made of a mixture of stone flour, stone grit smallest nominal grain size of 22 mm and bitumen as binder.

Bonding layer is divided according to the nominal grain size of stone material as follows:

- VS 16 and
- VS 32

Bonding layer is used in execution of pavement structures of highways and roads of very heavy and heavy traffic load group.

Technological thickness of the bonding layer is:

- VS 16, 50 to 60 mm
- VS 22 60 to 80 mm

8.6.2 QUALITY REQUIREMENTS FOR BONDING LAYER COMPONENT MATERIALS

Stone grit

Stone grit shall be in accordance with quality requirements. For execution of bonding layer the following stone grit categories shall be used:

KS-E-I,

KS-E-II,
KS-E-III and KS-S-I.

Separated and partially separated granular stone material shall not be used for the execution of bonding layer.

8.6.3 SAND

Natural and crushed sand shall be in accordance with the quality requirements. All categories of crushed sand can be used.

8.6.4 STONE FLOUR

Stone flour shall be in accordance with the quality requirements for category KB-I.

Use of return stone flour is allowed in the amount of 50% maximum of the total added quantity of stone flour, if the return stone flour is not of silicate origin.

8.6.5 BITUMEN BINDER

When choosing the type of bitumen care shall be taken about the climatic zones, according EN standard.
Rod construction bitumen BIZ 60 and BIT 90 are used as binder, quality according to the EN standard, or bitumen mark 50/70 according to the EN 12591 standard.
Road construction bitumen shall be in accordance with the quality requirements.

Polymer modified bitumen or road construction bitumen with addition of natural bitumen or polymer admixtures, added in the production process itself at the asphalt mixture production plant, shall be used in special cases.

Polymer modified bitumen (PmB) shall be in accordance with the quality requirements.

8.6.6 BONDING LAYER QUALITY REQUIREMENTS

Composition of asphalt mixture

Square mash openings, screen, mm	Type of bonding layer	
	VS 16	VS 22
	Fall through screen, % (*m/m*)	
0,09	3 to 9	3 to 9
0,25	7 to 22	6 to 20
0,71	15 to 30	11 to 28
2,0	25 to 40	19 to 35
4,0	34 to 50	27 to 44
8,0	48 to 68	36 to 57
11,2	60 to 82	45 to 68
16,0	90 to 100	58 to 82
22,4	100	90 to 100
31,5		100

Table 63 - Grain size distribution of asphalt mixture stone mix

Type of bonding layer	Rough estimate of bitumen, %(*m/m*)
VS 16	4,7 to 5,7
VS 22	4,5 to 5,5

Table 64 - Rough estimate of bitumen content in asphalt mixture for BL

Exact percentage of bitumen is determined by the asphalt mixture initial job mix formula and the confirmed asphalt mixture job mix formula.

8.6.7 PROPERTIES OF ASPHALT MIXTURE

Property	Traffic load group	
	Highways and very heavy	Heavy
Stability at 60 °C, minimum, kN	8	7
Stability and deviation ratio at 60 °C, minimum, kN/mm	2,2	1,7
Percentage of voids, %(*V/V*)	4 do 7	4 do 7
Filling of stone mix voids by bitumen, %	57 do 75	57 do 75

Table 65 - Physical and mechanical properties of asphalt mixture for VS 16 and VS 22 depending on the traffic load group

8.6.8 PROPERTIES OF PLACED COURSE

Property	Traffic load group	
	Highways and very heavy	Heavy
Percentage of voids, %(*V/V*)	5 do 9	4 do 9
Rate of compactness, minimum, %	98	98
Thickness * - individually, maximum, % - mean value, maximum, %	 - 15 from designed - 5 from designed	
Bonding of courses, minimum, N/mm^2	1,0 (1,5)**	

Table 66 - Percentage of voids, rate of compactness, thickness and bonding of placed courses in relation to the traffic load group

* Thickness greater than 20% from the designed shall not be taken in the mean thickness calculation.
** In case when the base is sprayed with polymer bitumen emulsion.

	Traffic load group

Property	Highways	Heavy and very heavy
Evenness: - IRI($_{100}$) , maximum, m/km	1,4	1,8
- measuring staff 3 m, maximum, mm	5	6
Height: Allowed elevation deviation from the designed elevation position , maximum %	10	15
Cross fall:: Allowed deviation from the designed cross fall (each profile), maximum, % (aps.)	0,4	
Position: Allowed deviation (horizontal position of left and right edge) from the designed elevation position, maximum, mm	25	

Table 67 - Evenness, height, cross fall and horizontal position of the executed bonding layer

8.6.9 CONTROL TESTING

Control testing of component materials

Control testing of component materials shall be done in accordance with these GTR.

Control testing of produced asphalt mixture

Samples of asphalt mixture shall be taken at the production plant and at the placing site.

Asphalt mixture composition is tested with at least on sample for every 500 tons of produced asphalt mixture.

Physical and mechanical properties of asphalt mixture shall be tested by at least one sample for every 750 tons of produced asphalt mixture.

8.6.10 CONTROL TESTING OF PLACED ASPHALT MIXTURE

Control testing of the course placing works shall be in accordance with sub-item 7.4.

8.6.11 AUDIT TESTING OF PRODUCED ASPHALT MIXTURE

Samples of asphalt mixture for audit testing as usually taken at the asphalt mixture placing site.

Composition and physical and mechanical properties of asphalt mixture shall be tested for every 1500 tons of produced asphalt mixture.

8.6.12 AUDIT TESTING OF PLACED COURSE

Rate of compactness, percentage of voids, thickness and bonding of placed course shall be tested o samples taken at least every 2000 m^2 of placed course

Height, cross fall and position of placed layer are tested by special measuring device, checking at least 20% data collected by the Contractor during control testing of asphalt mixture placing.

8.6.13 QUALITY EVALUATION OF PLACED ASPHALT COURSE

Placed asphalt course shall be evaluated and taken over by the supervising engineer on the basis of results of control testing and audit testing.

Percentage of bitumen determined by samples of asphalt mixture, as part of the audit testing and control testing.

Grain site distribution of asphalt mix, determined by sampling of asphalt mixture during control testing and audit testing, shall satisfy the requirements.

Physical and mechanical properties of asphalt mixture shell satisfy the requirements.

Properties of placed asphalt course shall satisfy the requirements.

All found faults shall be removed by the Contractor.

All costs of such works shall be at the expense of the Contractor, including all additional tests and measurements needed to be done in order to test the quality of the remedy.
All works not in accordance with the quality requirements, not remedied according to the requests of the supervising engineer shall not be paid to the Contractor.

8.6.14 CALCULATION OF WORK

Quantity of performed works shall be measured per square meters of upper surface of actually placed and incorporated binding layer in accordance with the design.

Defined quantities shall be paid per contracted unit price for square meter.
The price includes all costs of material supply, production and placing of asphalt mixture, transport, equipment all everything else needed to complete the works.

If the works are not completely in accordance with the GTR requirements.

Decreased value of works shall be deducted from the Contractor's contracted price of works.

8.7 ASPHALT-CONCRETE WEARING COURSE (AC-WC)

8.7.1 DESCRIPTION

Asphalt-concrete wearing course is an asphalt course made of a mixture of stone flour, stone material and bitumen as binder, where the grain size distribution of stone mix is made according to the principle of the most densely made material.

Asphalt mixture for the asphalt-concrete wearing course is divided according to:

- Nominal grain size of stone material,
- Grain size distribution of stone mix and the type of used stone material.

According to the nominal grain size of stone material, asphalt-concrete wearing course is divided as follows:

- asphalt concrete AB 4
- asphalt concrete AB 8
- asphalt concrete AB 11 and
- asphalt concrete AB 16.

According to the grain size distribution of stone mix and the type of stone material used, asphalt mixture for the asphalt concrete wearing course is divided as follows:

AB4	standard limit values of the grain size distribution of stone mix of carbonate composition
AB 8	standard limit values of the grain size distribution of stone mix of carbonate composition
AB 8E	standard limit values of the grain size distribution of stone mix of silicate composition
AB 11	standard limit values of the grain size distribution of stone mix of carbonate composition
AB 11E	narrower limit values of grain size distribution of stone mix of silicate composition
AB 16	standard limit values of the grain size distribution of stone mix of carbonate composition
AB 16E	narrower limitivalues of grain size distribution of stone mix of silicate composition

Technological thickness of course (mm)						
AB 4	AB 8	AB 8E	AB 11	AB 11E	AB 16	AB 16E
20 do 30	30 do 40	30 do 40	35 do 50	35 do 50	45 do 60	45 do 60

Table 68 - Technological thickness of the placed AC -WC

	Type of wearing course

Traffic load group	AB 4	AB 8	AB 8E	AB 11	AB 11E	AB 16	AB 16E
Highways and very heavy	-	-	-	-	+	-	+
Heavy	-	-	+	-	+	-	+
Medium	-	+	+	+	+	+	-
Light	-	+	-	+	-	+	-
Very light	+	+	-	+	-	-	-

Table 69 - Application of AC-WC depending on the traffic load group

8.7.2 QUALITY REQUIREMENTS OF WEARING COURSE COMPONENT MATERIALS (AC-WC)

Stone grit

Stone grit shall be in accordance with the quality requirements given in sub-item 7.2.

Traffic load group			
Highway and very heavy	Heavy	Medium	Light and very light
KS-E-I	KS-E-I KS-E-II	KS-E-I KS-E-II KS-E-III KS-S-I	KS-E-I KS-E-II KS-E-III KS-S-I KS-S-II

Table 70 - Use of quality category of stone grit for AC-WC depending on the traffic load group

8.7.3 SAND

Natural and crushed sand shall be in accordance with the requirements.

Traffic load group			
Highway and very heavy	Heavy	Medium	Light and very light
DP02-E-I DP02-E-II DP02-S*	DP02-E-I DP02-E-II DP02-S	All categories of crushed sand of igneous and sedimentary origin	All categories of crushed sand of igneous and sedimentary origin and all categories of natural sand

* up to 50 %(*m/m*) maximum of the total quantity of crushed sand

Table 71 - Use of quality category of sand for AC-WC depending on the traffic load group

8.7.4 STONE FLOUR

Stone flour shall be in accordance with the requirements given in sub-item 7.2.

Stone flour of KB-I category only can be used for highways and roads of very heavy and heavy traffic load.

Return stone flour extracted at the asphalt production plant can be returned into the production process under the condition that the filler from that stone satisfies the quality requirements and that it was not produced by dusting of stone mix containing crushed sand of igneous origin.

Asphalt mixtures for highways and roads with very heavy traffic load use of return filler shall not be allowed.

8.7.5 BITUMEN BINDER

When choosing the type of bitumen attention shall be given to the type and intended use of asphalt mixture as well as the climatic zones according to the EN standard.

Road construction bitumen BIT 45, BIT 60 and BIT 90 shall be used as binder, bitumen mark 35/50, 50/70 and 70/100, according to the EN 12591 standard.

In special circumstances polymer modified bitumen or road construction bitumen with addition of natural bitumen or polymer admixtures used in the mixing process itself at the production plant shall be used.

8.7.6 WEARING COURSE QUALITY REQUIREMENTS (AC-WC)

Composition of asphalt mixture

Square mash opening, screen mm	Type of asphalt concrete						
	AB 4	AB 8	AB 8E	AB 11	AB 11E	AB 16	AB 16E
	Fall through screen, % (*m/m*)						
0,09	8 to 18	4 to 12	4 to 12	3 to 12	3 to 11	3 to 12	3 to 10
0,25	17 to 33	11 to 27	11 to 27	8 to 28	8 to 18	8 to 25	8 to 17
0,71	30 to 51	20 to 41	20 to 41	16 to 38	16 to 30	15 to 36	15 to 28
2,0	55 to 75	38 to 56	38 to 56	31 to 54	31 to 48	27 to 49	27 to 43
4,0	95 to 100	56 to 74	56 to 74	49 to 69	49 to 65	40 to 62	40 to 56
8,0	100	95 to 100	95 to 100	75 to 90	75 to 87	60 to 80	60 to 75
11,2		100	100	97 to 100	97 to 100	74 to 90	74 to 86
16,0				100	100	97 to 100	97 to 100
22,4						100	100

Table 72 - Limit values of stone mix grain size distribution for AC-WC

Type of asphalt concrete	Percentage of bitumen, %(*m/m*)
AB 4	6,8 to 8,0
AB 8	5,8 to 7,5
AB 8E	5,8 to 7,5

AB 11	5,4 to 7,0
AB 11E	5,4 to 6,5
AB 16	5,2 to 6,2
AB 16E	5,2 to 6,0

Table 73 - Rough estimate of bitumen content in asphalt mixture for AC- WC

8.7.7 ASPHALT MIXTURE PROPERTIES

Property	Traffic load group				
	Highways and very heavy	Heavy	Medium	Light	Very light
Stability at 60 ⍰C minimum, kN	8,5	8,0	7,0	7,0	5,0
Stability and deviation ratio at 60 ⍰C minimum, kN/mm	2,2	2,0	1,8	1,8	1,2
Percentage of voids, %(*V/V*)	3,5 to,5	3 to	3 to 5,5	2 to 4	1 to 3,5
Filling of stone mix voids with bitumen, %	64 do 79	65 do 82	68 do 83	75 do 88	80 do 93

Table 74 - Physical and mechanical properties of asphalt mixture for AC- WC in relation to the traffic load

8.7.8 PROPERTIES OF PLACED COURSE

Property	Traffic load group			
	Highways and very heavy	Medium	Light	Very light
Percentage of voids, %(*V/V*)	3,5 to 7,5	3 to 7	2 to 6	1,5 to 5,5
Rate of compactness, %	98	97	97	96
Thickness * -individually, maximum, % -mean value, maximum, %	 - 15 from designed - 5 from designed			
Bonding of course, minimum, N/mm^2	1,0 (1,5)**			

Table 75 - Percentage of voids, rate of compactness and bonding of placed AC-WC course in relation to the traffic load group

* Thickness greater than 20% from the designed shall not be taken in the mean thickness calculation.
* In case when the base is sprayed with polymer bitumen emulsion

Requirements for evenness, height, cross fall and horizontal position of the placed course are given in table above.

8.7.9 WEARING COURSE ADHESION

These GTR define the numeric values that have to be satisfied when measuring the adhesion property, i.e. when measuring the resistance to slipperiness of a wet wearing course surface or a concrete road surfacing. Resistance to slipperiness is measured within a time period not longer than 2 weeks after the completion of asphalt works. Resistance to slipperiness is defined by two limit values of the friction coefficient μ as follows:

- The friction coefficient μ is the lowest required value of friction of a wet road surfacing when the road is being opened for traffic. During traffic operation the friction coefficient value should not be less than μ_A . If the coefficient value changes bellow the limit value of μ_A, the state of the surfacing shall be monitored through periodical measurements of the resistance to slipperiness.
- Friction coefficient μ_b is the lowest allowed value of the resistance to slipperiness of the surface which, because of the danger of sliding shall not be lower, If the changed value to the friction coefficient drops below the limit value of μ_b , adequate measures shall be taken (decrease of the highest allowed driving speed and improvement of the surface course).

Property	Traffic load group			
	Highways	Very heavy and heavy	Medium	Light and very light
Evenness of layer: - IRI($_{100}$) , maximum, m/km - measuring staff 3 m, maximum, mm	1,0 3	1,5 4	2,0 6	2,5 7
Height of layer: Allowed elevation deviation from the designed elevation position , maximum%	5		10	
Cross fall:: Allowed deviation from the designed cross fall (each profile), maximum, % (aps.)	0,4			
Position: Allowed deviation (horizontal position of left and right edge) from the designed elevation position, maximum, mm	25		50	

Table 76 - Evenness, height, cross fall and horizontal position of the placed AC-WC in relation to the traffic load group

Estimate of the changed values of the resistance to slipperiness shall be done on the basis requirements given in these GTR, depending on the highest speed limit on the road, traffic load group and the conditions on the road itself. These conditions are divided on normal and unfavorable (potentially dangerous) conditions.

The potentially dangerous road conditions are:

- Road segments with longitudinal gradients greater than 6% and longer than 100 m,
- Curves with radius less than 150 m at stretched road route,
- Dangerous spots like road segments with strong side winds, bridges, tunnels and segments where the vehicles have to decrease their speed,

Normal road conditions are other circumstances on the road which are not stated. Depth of the pavement surface texture, defined by “sand blasting”, depending on the highest allowed speed is given in table 77.

Property	Highest allowed speed , (km/h)			
	60	80	100	120
Depth of texture, (mm)	0,13 to 0,30	0,19 to 0,40	0,27 to 0,53	0,37 to 0,70

Table 77 - Limit values of the texture depths

In accordance with the definitions of the friction coefficient limit values, μ_b and μ_A , table 78 shows the lowest (SRT_B) and highest (SRT_A) limit values SRT for normal and unfavorable (dangerous) road conditions, depending on the traffic oad group.

Traffic load groups	Normal road conditions		Unfavorable (dangerous) road conditions	
	SRT_B	SRT_A	SRT_B	SRT_A
Highways, very heavy, heavy and medium	50	60	-	-
Light and very light	45	55	-	-
All groups	-	-	55	65

Table 78 - Limit values of resistance to slipperiness

Procedure for evaluation of the measured values of the depth of pavement surface texture by “sprinkling” and the SRT pendulum values is given in table below.

Measured value of texture depth	Measured value of SRT		
	Below the limit value	Within the limit value	Above the limit value
Below the limit curve	-	-	-
Within the limit curves	-		
Above the limit curve	-		+

- Resistance to slipperiness of the road surface is insufficient,
* Additional measurements needed,
+ resistance to slipperiness of the road surface is sufficient.

Table 79 - Procedure for evaluation Of the resistance to slipperiness by combined method (SRT pendulum and “sand blasting”)

Limit values of the friction coefficient defined according to the measuring method SCRIM are given in table 80.

Friction coefficient	Speed of measuring apparatus , km/h		
	40	60	80
μSCRIM	0,60	0,53	0,46

Table 80 - Limit values of the friction coefficient according to SCRIM method

The highest allowed deviation of the friction coefficient for individual measured value of the segment length 100 m , in relation to the limit value is 0,03. This allowed deviation is relevant for the guarantee period.

8.7.10 WEARING COURSE QUALITY CONTROL (AC-WC)

Preliminary testing

Activities prior to the start of asphalt works, with respect to preliminary testing of material usability, initial job mix formula, confirmed job mix formula and trial section shall be done in accordance with sub-item 7.4.

During the production of initial job mix formula for asphalt mixtures intended for highways and roads of very heavy traffic load, the asphalt mixture shall be tested for resistance to permanent deformations (standard EN 12697-22 or EN 12697 –25) and to resistance against influence of water (EN 12697-12)

8.7.11 CONTROL TESTING OF PRODUCED ASPHALT MIXTURE

Samples of asphalt mixture shall be taken at the production plant and at the placing site.
Asphalt mixture composition is tested with at least on sample for every 500 tons of produced asphalt mixture.

Physical and mechanical properties of asphalt mixture shall be tested by at least one sample for every 500 tons of produced asphalt mixture.

8.7.12 AUDIT TESTING

Audit testing of component materials

Samples of component materials for asphalt mixture production shall be taken at the asphalt mixture production plant and tested in accordance with these GTR.

8.7.13 AUDIT TESTING OF PRODUCED ASPHALT MIXTURE

Samples of asphalt mixture for audit testing as usually taken at the asphalt mixture placing site.
Composition and physical and mechanical properties of asphalt mixture shall be tested for every 1000 tons of produced asphalt mixture.

8.7.14 AUDIT TESTING OF PLACED COURSE

Rate of compactness, percentage of voids, thickness and bonding of placed course shall be tested o samples taken at least every 2000 m^2 of placed course surface according to sub-item.

Height, cross fall and position of placed layer are tested by special measuring device, checking at least 20% data collected by the Contractor during control testing of asphalt mixture placing

Adhesiveness of the wearing course surface shall be tested at least one sample every 10 000 m^2 of placed wearing course.

8.7.15 QUALITY EVALUATION OF PLACED WEARING COURSE (AC-WC)

Placed wearing course AC-WC shall be evaluated and taken over by the supervising engineer on the basis of results of control testing and audit testing.

Percentage of bitumen determined by samples of asphalt mixture, as part of the audit testing and control testing.

Grain site distribution of asphalt mix, determined by sampling of asphalt mixture during control testing and audit testing, shall satisfy the requirements

Physical and mechanical properties of asphalt mixture determined by sampling of asphalt mixture during control testing and audit testing, shell satisfy the requirements

Properties of placed asphalt course determined during control testing and audit testing, shall satisfy the requirements.

All found faults shall be removed by the Contractor.

All costs of such works shall be at the expense of the Contractor, including all additional tests and measurements needed to be done in order to test the quality of the remedy.

All works not in accordance with the quality requirements, not remedied according to the requests of the supervising engineer shall not be paid to the Contractor.

8.7.16 CALCULATION OF WORK AND STANDARDS

Quantity of performed works shall be measured per square meters of upper surface of actually placed and incorporated AC-WC in accordance with the design.

Defined quantities shall be paid per contracted unit price for square meter.

The price includes all costs of material supply, production and placing of asphalt mixture, transport, equipment all everything else needed to complete the works.

If the works are not completely in accordance with the GTR requirements, the quality shall be evaluated according to these specifications.

Decreased value of works shall be deducted from the Contractor's contracted price of works.

EN 1426:2002	Bitumen and bituminous binders – Determination of needle penetration
EN 1427:2002	Bitumen and bituminous binders – Determination of softening point – Ring and Ball method
EN 1926:1999	Natural stone test methods – Determination of compressive strength
EN 1936:1999	Natural stone test methods – Determination of real density and apparent density and of total and open porosity
EN 12370:1999	Natural stone test methods – Determination of resistance to salt crystallization
EN 12407:2000	Natural stone test methods – Petrographic examination
EN 12592:2002	Bitumen and bituminous binders – Determination of solubility
EN 12593:2002	Bitumen and bituminous binders – Determination of the Fraass breaking point
EN 12594:2002	Bitumen and bituminous binders – Preparation of test samples
EN 12606-1:2002	Bitumen and bituminous binders – Determination of the paraffin wax content – Part 1: Method by distillation
EN 12607-1:2002	Bitumen and bituminous binders – Determination of resistance to hardening under the influence of heat and air – Part 1: RTFOT Method
EN 12607-3:1999	Bitumen and bituminous binders – Determination of resistance to hardening under the influence of heat and air – Part 3: RFT method
EN ISO 3838:1999	Oil and liquid or solid oil products – Determining the density or relative density – Method by means of cylinder with capillary plug and graded bi-capillary cylinder.
prEN 58:2001	Bitumen and bituminous binders – Sampling of bituminous binders
EN 932-1:1996	Tests for general properties of aggregates-Part 1: Methods for sampling
EN 932-2:1999	Tests for general properties of aggregates-Part 2: Methods for reducing laboratory samples
EN 932-3:1996	Tests for general properties of aggregates-Part 3: Procedure and terminology for simplified petrograpphic description
EN 933-1:1997	Tests for geometrical properties of aggregates-Part 1: Determination of particle size distribution-Sieving method
EN 933-4:1999	Tests for geometrical properties of aggregates-Part

	4: Determination of particle shape-Shape index
EN 933-5:1998	Tests for geometrical properties of aggregates-Part 5: Determination of percentage of crushed and broken surface in coarse aggregate particles
EN 933-8:1999	Tests for geometrical properties of aggregates-Part 8: Assessment of fines – Sand equivalent test prEN 933-
10:1999	Tests for geometrical properties of aggregates-Part 10: Assessment of fines – Grading of fillers (air jet sieving)
EN 1097-2:1998	Tests for mechanical and physical properties of aggregates-Part 2: Methods for the determination of resistance to fragmentation
EN 1097-4:1999	Tests for mechanical and physical properties of aggregates-Part 4: Determination of voids of dry compacted filler
prEN 1097-6:2000	Tests for mechanical and physical properties of aggregates-Part 6: Determination of particle density and water absorption
EN 1097-7:1999	Tests for mechanical and physical properties of aggregates-Part 7: Determination of particle density of filler; cylinder method
EN 1097-8:1999	Tests for mechanical and physical properties of aggregates-Part 8: Determination of polished stone value
EN 1367-2:1998	Tests for thermal and weathering properties of aggregates – Part 2: Magnesium sulfate test
EN 1428:1999	Bitumen and bituminous binders – Determination of water content in bitumen emulsions – Azeotropic distillation method
EN 1429:1999	Bitumen and bituminous binders – Determination of residue on sieving of bitumen emulsions, and determination of storage stability by sieving
EN 1430:1999	Bitumen and bituminous binders – Determination of particle polarity of bitumen emulsions
prEN 12272-2:1999	Surface dressing – Test method – Part 2: Visual assessment of defects
EN 12274-1:2001	Slurry surfacing-Test methods-Part 1: Sampling for binder extraction
EN 12274-6:2001	Slurry surfacing-Test methods-Part 6: Rate of application
EN 12371:2001	Natural stone test methods – Determination of frost resistance
EN 12591:1999	Bitumen and bituminous binders – Specifications for paving grade bitumen
EN 12595:1999	Bitumen and bituminous binders – Determination of cinematic viscosity
EN 12596:1999	Bitumen and bituminous binders – Determination of dynamic viscosity by vacuum capillary
EN 12697-1:2000	Bituminous mixtures – Test methods for hot mix

	asphalt –Part 1: Soluble binder content
prEN 12697-2:1998	Bituminous mixtures – Test methods for hot mix asphalt –Part 2: Particle size distribution
prEN 12697-8:1996	Bituminous mixtures – Test methods for hot mix asphalt –Part 8: Determination of the air voids content of bituminous materials
prEN 12697-11:1999	Bituminous mixtures – Test methods for hot mix asphalt – Part 11: Determination of the compatibility between aggregate and bitumen
prEN 12697-12:1999	Bituminous mixtures – Test methods for hot mix asphalt – Part 12: Determination of the water sensitivity of bituminous specimens
EN 12697-13:2000	Bituminous mixtures – Test methods for hot mix asphalt – Part 13: Temperature measurement prEN
12697-20:1999	Bituminous mixtures – Test methods for hot mix asphalt – Part 20: Indentation using cube or Marshall specimens
prEN 12697-22:1999	Bituminous mixtures – Test methods for hot mix asphalt – Part 22: Wheel tracking
EN 12697-27:2000	Bituminous mixtures – Test methods for hot mix asphalt – Part 27: Sampling
EN 12697-28:2000	Bituminous mixtures – Test methods for hot mix asphalt – Part 28: Preparation of samples for determination of binder content, water content and grading
prEN 12697-30:2000	Bituminous mixtures – Test methods for hot mix asphalt – Part 30: Sample preparation, impact compactor
prEN 12697-34:1999	Bituminous mixtures – Test methods for hot mix asphalt – Part 34: Marshall test
prEN 12697-36:1996	Bituminous mixtures – Test methods for hot mix asphalt – Part 36: Method for determining the thickness of a bituminous pavement
prEN 13036-4:1997	Pavement surface characteristics – Test methods – Part 4: Method for measurement of skid resistance of a surface: The pendulum test
prEN 13036-7:1997	Pavement surface characteristics – Test methods – Part 7: Measurement of single irregularities – The straight edge test
prEN 13075-1:1997	Petroleum products - Bitumen and bituminous binders – Determination of breaking behavior – Part 1: Determination of breaking value of cationic bitumen emulsions - Mineral filler method
EN 13108-10:1997	Bituminous mixtures – Quality – Part 10: Production plant control
prEN 13398:1998	Bitumen and bituminous binders – Determination of the elastic recovery of modified bitumen
prEN 13399.1998	Bitumen and bituminous binders – Determination of storage stability of modified bitumen
EN 13614-2:1999	Bitumen and bituminous binders – Determination of

	adhesiveness of bitumen emulsions by water immersion test – Part 2: Aggregate method
EN 13755:2001	Natural stone test methods – Determination of water absorption at atmospheric pressure
prEN 14023:2001	Bitumen and bituminous binders – Specifications for polymer modified bitumen

9. CONCRETE WORKS

9.1 CONCRETE FABRICATION AND PLACING REQUIREMENTS

9.1.1 INTRODUCTION

Minimum quality requirements for materials, products and works that are used in concrete works are specified in this section. The GTR are written in such a way that they form a part of the contract while requirements relating to special works are included in the contract as Special Technical Requirements (STR).

These General Technical Requirements for Concrete Works on Roadways (hereinafter referred to as Technical Requirements or GTR) contain technical requirements (measures and standards) for quality control and quality assurance during production, placing and maintenance of concrete and reinforced-concrete structures, including quality evaluation and calculation of work.

Present requirements can be used for all concrete works on roads as specified in cost estimates forming part of design documents, and also for subsequent on-site activities as needed for full completion of the project. Separate requirements, with additional or more stringent quality criteria, may be prepared for individual concrete works and structures.

This document is based on available European standards (EN), prevailing Albanian standards (ARDM) and standards referred to therein. It has been harmonized with applicable Albanian regulations and must be applied when appropriate for all works carried out on Albanian roads.

Materials, products, equipment and works must comply with the standards and technical regulations specified in the design documentation. If no standard is specified, then an appropriate EN (European standard) must be applied. If a standard or regulation becomes invalid during realization of the project, it will be substituted by an appropriate replacement standard or regulation.

The Contractor may propose application of generally recognized technical rules (standards) issued by a foreign standardization body (such as ISO, EN, DIN, ASTM, etc.), subject to written explanation and approval of the Supervising Engineer. This change may be accepted by the Supervising Engineer if approved by the Designer. The Contractor is required to register this change in the working design.

These general technical requirements are applied either for concrete placed on site to form monolithic concrete structures, for precast structures or for precast structural elements and their assembly.

The concrete may be fabricated on the site, in the central concrete batching plant (concrete plant) or in precast element casting yard.

General technical requirements define:

- concrete components,
- properties of fresh and hardened concrete and verification of these properties,

- restrictions relating to concrete composition,
- concrete quality requirements,
- delivery of fresh concrete,
- quality control during production of concrete,
- conformity criteria and evaluation of conformity,
- quality requirements for scaffolds and formworks,
- quality requirements for steel used for concrete reinforcement,
- quality requirements for prestressing materials,
- quality requirements for the realization of concrete and reinforced-concrete structures,
- placed concrete protection requirements,
- inspection during realization of concrete structures,
- procedures and activities to be carried out in case of non-conformity of construction products or completed concrete works,
- general requirements for maintenance of concrete structures and for repair of damage resulting from use of such structures.

They are applied only for dense concrete, compacted in such a way that it does not contain a significant quantity of entrapped air, except for air micropores entrained into concrete by aeration. GTR are also applied for ordinary concrete, lightweight concrete and heavy concrete, placed either into concrete structures or concrete pavement.

Concrete structures include:

- culverts and bridges, and
- accessory structures.

9.1.2 GENERAL TERMS AND DEFINITIONS USED IN THE FIELD OF CONCRETE CONSTRUCTION

Definitions of general terms for road works are given in Volume I (Section 1 - General) of these General Technical Requirements. Definitions, terms, and abbreviations used in the field of concrete construction and concrete structures are provided in this section of GTR:

Concrete: material obtained by mixing cement, coarse and fine aggregate and water, with or without chemical or mineral admixtures, which develops its properties by hydration of the cement.

Fresh concrete: completely mixed concrete ready for transport, placing and compaction by a specified procedure.

Hardened concrete: concrete in a hardened condition, i.e. concrete which has already reached a specified strength.

Site-mixed concrete: concrete prepared on the construction site by the user of the concrete for his own use.

Ready-mixed concrete: concrete delivered in fresh condition by a person other than the user. For the purposes of these General Technical Requirements, the ready-mixed concrete can also be:

- concrete produced by the user outside of the construction site,
- concrete produced on the construction site, but not by the user.

Precast concrete element: concrete product fabricated and cured outside of its final place of use.

Normal-weight concrete: concrete having an oven-dry density greater than 2000 kg/m3 but not exceeding 2600 kg/m3.

Light-weight concrete: concrete having an oven-dry density of not less than 800 kg/m^3 and not more than 2000 kg/m^3.

Heavy-weight concrete: concrete having an oven-dry density greater than 2600 kg/m^3.
High-strength concrete: concrete with a compressive strength class higher than C50/60 in the case of normal-weight and heavy-weight concrete, and LC50/55 in the case of light-weight concrete.

Designed concrete: concrete for which the required properties and additional characteristics are specified to the producer who is responsible for providing a concrete conforming to the required properties and additional characteristics.

Prescribed concrete: concrete for which the composition of the concrete and the constituent materials to be used are specified to the producer who is responsible for providing a concrete with the specified composition.

Standardized prescribed concrete: concrete whose composition is defined in a valid standard.

Concrete family: a group of concrete compositions for which a reliable relationship between relevant properties is established and documented.

cubic meter of concrete: the quantity of fresh concrete which, when compacted in accordance with the procedure given in EN 12350-6, occupies a volume of one cubic meter.

truck mixer: Concrete mixer mounted on a self-propelled chassis capable of mixing and delivering a homogenous concrete.

agitating equipment: equipment generally mounted on a self-propelled chassis and capable of maintaining fresh concrete in a homogeneous state during transport.

non-agitating equipment: dump truck or other type of truck that is used for the transport of concrete without mixing.

Batch: quantity of concrete mixed in one cycle of mixer operation or the quantity discharged during one minute from a continuous mixer.

Load: quantity of concrete transported in a vehicle consisting of either one or several batches.

Delivery: the process of handing over the fresh concrete by the producer.

Chemical admixture: material added during the mixing process of concrete in small quantities related to the mass of cement to modify the properties of fresh or hardened concrete.

Mineral addition: finely divided material used in concrete in order to improve certain properties or to achieve special properties. There are two types of mineral additions:

- nearly inert additions (Type I),

- pozzolanic or latent hydraulic additions (Type II).

Aggregate: granulated mineral material suitable for use in concrete. Aggregate may be natural, artificial or recycled from material previously used in construction.

Normal-weight aggregate: aggregate with an oven-dry particle density > 2000 kg/m^3 < 3000 kg/m^3, when determined according to EN 1097-6.

Light-weight aggregate: aggregate of mineral origin having an oven-dry particle density 2000 kg/m^3 when determined according to EN 1097-6, or a loose oven- dry bulk density 1200 kg/m^3 when determined according to EN 1097-3.

Heavy-weight aggregate: aggregate having an oven-dry particle density 3000 kg/m^3 when determined according to EN 1097-6.

Cement (hydraulic binder): finely ground inorganic material which, when mixed with water, forms a paste which sets and hardens by means of hydration reactions and processes and which, after hardening, retains its strength and stability even under water.

Total water content: the added water plus water already contained in the aggregates and on the surface of the aggregates plus water in the admixtures and in additions used in the form of a slurry and water resulting from any added ice or steam heating.

Effective water content: the difference between the total water content in fresh concrete and water absorbed by the aggregate.

water/cement ratio: ratio of the effective water content to cement content by mass in the fresh concrete.

characteristic strength: the value of strength below which 5 % of the population of all possible strength determinations of the volume of concrete under consideration, are expected to fall.

Entrained air: microscopic air bubbles intentionally incorporated in concrete during mixing, usually by use of a surface active agent; typically between 10 m and 300 m in diameter and spherical or nearly so.

Entrapped air: air voids in concrete which are not purposely entrained.

Construction site: area where the construction work is undertaken.

Specifications: final compilation of documented technical requirements given to the producer in terms of performance or composition**.**

Specifier: person or body responsible for required (specified) properties of concrete.

Producer: person or body that manufactures fresh concrete.

User: person or body that uses fresh concrete in the execution of a construction or a component.

Working life: the period of time during which the performance of the concrete in the structure will be kept at a level compatible with the fulfillment of the performance requirements of the structure, provided it is properly maintained.

Initial test: test or tests to check before the production starts how a new concrete or concrete family

shall be composed in order to meet all the specified requirements in the fresh and hardened states.

identity test: test to determine whether selected batches or loads come from a conforming population.

Conformity test: test performed by the producer to assess conformity of the concrete.

Evaluation of conformity: systematic examination of the extent to which a product fulfills specified requirements.

Environmental actions: biological, chemical and physical action to which concrete is exposed and which result in effects on the concrete or reinforcement, or embedded metal, that are not considered as loads in structural design**.**

Verification: confirmation by examination of objective evidence that specified requirements have been fulfilled.

Permitted deviation: permitted algebraic differences between the limits of size and the corresponding reference size (see ISO 1803/1 Building construction - Tolerances - Vocabulary - Part I: General terms).

precast element: concrete element conforming to a product standard, cast and cured in a place other than the final location of use.

Technical approval: document issued by a competent legal person attesting to the conformity of construction products not covered in or deviating from the existing regulations.

Certificate (confirmation of conformity): document issued by a competent legal person attesting to the conformity of a construction product with an existing regulation (standard).
Certification mark of conformity: specified mark stamped on the packaging or dispatch document of a construction product in order to confirm its conformity with an existing regulation (standard).

Project specifications: documents covering technical data and requirements for a particular project prepared to supplement and qualify the requirements of relevant standards.

Reference line: line defined in the project specification to which sizes are related.

Secondary line: any line used for the purpose of setting-out the proposed building and for checking the conformity of the building or building parts (cf. ISO 4463-1:1998: Measurement procedures for portions of structures. Measurement
- Part I: Planning and organizing measurement procedures, acceptance criteria).

Surface finish: Description of the appearance of the concrete surface including aspects of geometry, texture, color, etc.

Temporary structure: structure designed for short lifetime, according to Table 2.1 of ENV 1991-1.

Tolerance: permitted variation of size (cf. ISO 1803/1. Construction - Tolerances
- Vocabulary - Part I: General terms.

Tolerances for precast elements are subdivided as follows:

- production tolerances, i.e. geometrical tolerances as defined in the product standards,

- erection tolerances, i.e. geometrical tolerances related to the location, verticality, horizontality or other characteristics of the construction assembly,
- construction tolerances, i.e. geometrical tolerances that are a combination of production, site construction and erection tolerances.

Normal tolerances: The basic limits for geometrical deviations that ensures that the structure:

- satisfies the design assumptions,
- achieves other functional requirements of the construction works.

Special tolerances: tolerances that are more stringent than normal tolerances.

9.1.3 SYMBOLS AND ABBREVIATIONS

X0	Exposure class for no risk of corrosion or attack
XC	Exposure classes for risk of corrosion induced by carbonation
XD	Exposure classes for risk of corrosion induced by chlorides other than from sea water
XS	Exposure classes for risk of corrosion induced by chlorides from sea water
XF	Exposure classes for freeze/thaw attack
XA	Exposure classes for chemical attack
S1 to S5	Consistence classes expressed by slump
V0 to V4	Consistence classes expressed by Vebe time
C0 to C3	Consistence classes expressed by degree of compactability F1
to F6	Consistence classes expressed by flow diameter
C.../...	Compressive strength classes for normal-weight and heavy-weight concrete
LC.../...	Compressive strength classes for light-weight concrete
$f_{ck,valj}$	Characteristic compressive strength of concrete determined by testing cylinders
$f_{c,valj}$	Compressive strength of concrete determined by testing cylinders $f_{ck,koc}$
	Characteristic compressive strength of concrete determined by testing cubes
$f_{c,koc}$	Compressive strength of concrete determined by testing cubes f_{cm}
	Mean compressive strength of concrete
f_{cmj}	Mean compressive strength of concrete at the age of (j) days f_{ci}
	Individual test result for compressive strength of concrete
f_{tk}	Characteristic splitting tensile strength of concrete
f_{tm}	Mean splitting tensile strength of concrete
f_{ti}	Individual test result for testing splitting tensile strength of concrete D
	Density class of light-weight concrete
D_{max}	Maximum nominal upper aggregate size
CEM	Cement type according to EN 197-1
S	Standard deviation calculated from at least 35 successive test results S_{15}
	Standard deviation calculated from at least 15 successive test results.

AQL	Acceptance quality level (cf. ISO 2859-1)
v/c	water/cement ratio
k-vrij	Factor that takes into account activity of a type II addition e
	Verification scale interval for the weighing equipment
m	Load exerted on weighing equipment
n	Number
T	temperature
l (L)	length
h	height
t	thickness

9.1.4 GENERAL TERMS AND CLASSIFICATION OF CONCRETE STRUCTURES CULVERTS AND BRIDGES

Culverts are load bearing structures up to 10 m in span, while **bridges** are load bearing structures of more than 10 m in span. According to their use, traffic and position, bridges (culverts) may be:

- road bridges,
- railway bridges,
- pedestrian bridges,
- aqueducts (culverts and bridges for water supply schemes and channels),
- viaducts,
- overpasses,
- underpasses.

Accessory concrete structures

Accessory concrete structures on roads are:

- water evacuation and environment protection structures,
- road operation structures (toll collection facilities, road operation centers, etc.),
- road maintenance structures,
- roadside service structures (rest areas, gas stations, car-repair shops, motels, etc.).

Concrete pavement

Concrete pavement structure may be made of unreinforced concrete, reinforced concrete, continuously reinforced concrete, prestressed concrete, rolled concrete and precast elements.

9.2 PROPERTIES, FABRICATION AND CONFORMITY OF CONCRETE

9.2.1 CLASSES

Classes of exposure to environmental influences

Environmental influences on concrete structures are determined in the final design on the basis of actual conditions of use of the designed structure. Exposure classes are presented in Table 1 EN 206. With respect to actual conditions of use (aggressive action of environment), the following classes may be differentiated:

No risk of corrosion or attack

X0 for concrete without reinforcement or embedded metal in the environment characterized by no exposure to freezing, abrasion or chemical action, and for reinforced concrete in very dry conditions of use.

Corrosion induced by carbonation

XC1 dry or permanently wet
XC2 wet, rarely dry
XC3 moderate humidity
XC4 cyclic wet and dry

Corrosion induced by chlorides other than from sea water

XD1 moderate humidity
XD2 wet, rarely dry
XD3 cyclic wet and dry

Class XD1 covers reinforced-concrete surfaces exposed to chlorides from air, Class XD2 covers reinforced-concrete surfaces exposed to the action of industrial waste water containing chlorides, and Class XD3 covers reinforced-concrete surfaces of bridges exposed to direct action (sprinkling) of chlorides (dissolving salts).
Corrosion induced by chlorides from sea water

XS1 zones near the sea exposed to airborne salt
XS2 zones exposed to constant sea action (submerged parts of reinforced- concrete structure)
XS3 tidal, splash and spray zones

Freeze/thaw attack with or without deicing agents

XF1 moderate water saturation, no deicing salt
XF2 moderate water saturation, with deicing salt
XF3 high water saturation, no deicing salt
XF4 high water saturation, with deicing salt

Class XF1 covers vertical concrete surfaces exposed to atmospheric influences, Class XF2 covers vertical concrete surfaces of transport facilities exposed to freezing and deicing salt from air, Class XF3 covers horizontal concrete surfaces exposed to rain and freezing, and Class XF4 covers concrete surfaces directly exposed to freezing and deicing salt, e.g. road pavement surfaces, zones of low and high tides, and wave sprinkling zones additionally exposed to freezing.

Chemical attack

XA1 slightly aggressive chemical environment
XA2 moderately aggressive chemical environment

XA3 highly aggressive chemical environment

The class of chemical aggressiveness should be determined based on the actual presence of chemically aggressive substances in water or soil that are in contact with structural concrete, taking at that into account limit values for aggressive substances as indicated in Table 2. EN.206.

If concrete is exposed to more that one class of exposure, then the corresponding requirements, exposure classes, and concrete protection measures, should be combined as appropriate.

9.2.2 FRESH CONCRETE

Consistence class

Depending on the testing procedure selected, the consistence of concrete should be classified in accordance to EN standards
Different consistence classes given in tables 7-00.1.1-1 to 7-00.1.1-4 are not correlated to one another.

The consistence class has not been determined for concrete of moist-earth consistence, such as the rolled concrete that is compacted by technology similar to that used for compaction of soil materials.

Class	Slump in mm
S1	10 to 40
S2	50 to 90
S3	100 to 150
S4	160 to 210
S5*	⍰ 220

Table 81 - Slump classes

* Cf. 7-00.1.2

Class	Vebe time in seconds
V0*	⍰ 31
V1	30 to 21
V2	20 to 11
V3	10 to 6
V4*	5 to 3

Table 82 - Vebe classes

When the concrete is classified according to maximum aggregate grain size, the top value of the aggregate's coarse fraction (D_{max}) is to be defined according to EN 12620.

9.2.3 HARDENED CONCRETE

Classes of compressive strength of concrete

When classifying concrete according to its compressive strength, the Table 7- 00.1.1-5 is used for the normal-weight and heavy-weight concrete, while the Table 7-00.1.1-6 is used for the light-weight concrete. the value $f_{ck.valj}$ is the required characteristic compressive strength of concrete cylinders

measuring 150 x 300 mm at 28 days, and the value $f_{ck.koc}$ is the required characteristic compressive strength of 150 mm concrete cubes at 28 days.

Strength class	$f_{ck.valj}$ N/mm^2	$f_{ck.koc}$ N/mm^2
C 8/10	8	10
C 12/15	12	15
C 16/20	16	20
C 20/25	20	25
C 25/30	25	30
C 30/37	30	37
C 35/45	35	45
C 40/50	40	50
C 45/55	45	55
C 50/60	50	60
C 55/67	55	67
C 60/75	60	75
C 70/85	70	85
C 80/95	80	95
C 90/105	90	105
C 100/115	100	115

9.2.4 REQUIREMENTS FOR CONCRETE AND VERIFICATION PROCEDURES REQUIREMENTS FOR CONCRETE COMPONENTS

Concrete components must not contain harmful ingredients in quantities that may be detrimental to the durability of concrete, or that may cause corrosion of reinforcing steel. They must be selected in accordance with the planned use of concrete.

Only components determined appropriate for the planned use may be used in concrete compliant with EN 206.

When no Albanian standard regulates the use of a particular component, i.e. when there is no standard which specifically deals with the use of this component in concrete compliant with EN 206, or when such component significantly deviates from requirements given in an applicable Albanian standard, then its acceptability may be determined through technical approval issued by competent ministry or a body authorized by such ministry, which specifically regulates the use of such component in concrete compliant with EN 206.

9.2.5 CEMENT

Concrete can be fabricated with cement specified in standard EN 197 which, in its presently available Part I, specifies composition, properties and conformity criteria for normal-weight concrete.
As to other cement types, cements to be used include cements which will be regulated by other parts of EN 197 and, while awaiting their publication, cements covered with still applicable EN or technical approvals given by the competent ministry.

Only cements with certificate confirming their conformity with an applicable standard, as delivered by an authorized Albanian institution, shall be used.

The conformity is proven by the certification sign. The appearance and use of this sign is regulated by the State Office for Standardization and Metrology, i.e. by its Bylaw on the Appearance and Use of Certification Sign. The sign must be apposed on the packaging in which the cement is dispatched, or on

the dispatch document if the cement is transported by tank truck.

Imported cements must comply with requirements specified in appropriate EN standards and these technical requirements, and must be certified in the prescribed manner.

The cement in bags and tanks must be transported and stored in the manner and under conditions that will not bear a negative influence on its quality.

The cement will be stored separately, i.e. by types and classes, and will be used based on the order in which it has been received at the concrete plant. Cements of the same type and class, but produced by different manufacturers, may be stored in the same silo if it has previously been proven that their mixing will not negatively affect properties and quality of the resulting concrete.

Cement stored longer than 3 months at the concrete plant may be used only if it has been proven by testing its basic properties that its quality is still compliant with appropriate requirements.

Unless otherwise specified, the price of cement will be a part of the unit price of concrete and will not be charged separately.

9.2.6 AGGREGATE

The concrete may be fabricated using the normal-weight and heavy-weight aggregate specified in the standard EN 12620 and the light-weight aggregate specified in the standard EN 13055.

Aggregate properties and the frequency of control tests specified in these standards are dependant on quality classes. Only aggregates with properties complying with requirements for at least second quality class may be used for concrete works on roads.

During concrete preparation, the aggregate must be divided in at least three fractions.

Naturally granulated aggregate may only be used for the fabrication of rolled concrete, blinding concrete and fill concrete belonging to class C 8/10.

Only aggregate with certificate confirming conformity with the mentioned standard, as delivered by an authorized Albanian institution, shall be used.

The conformity is proven by the certification sign. The appearance and use of this sign is regulated by the State Office for Standardization and Metrology, i.e. by its Bylaw on the Appearance and Use of Certification Sign. The sign must be apposed on the dispatch document which is delivered to the purchaser together with the aggregate.

The acceptability of the recycled aggregate, i.e. of the aggregate obtained by treatment of a previously used inorganic material, which is not as yet regulated by the standard EN 206, will be determined in accordance with requirements given in these General Technical Requirements.

Individual aggregate fractions must be transported and stored separately, so that they do not become soiled, additionally fragmented or segregated.

The surface of the area in which the aggregate will be stored must be sufficiently inclined to enable evacuation of water released by the aggregate.

Only the aggregate of the same nominal fraction and from the same source may be stored at the same

location. However the storage of aggregates of the same nominal fraction but from different sources will also be allowed, but only if it has previously been proven that the aggregates have the same or sufficiently similar properties, and that their mixing will not result in the difference during concrete proportioning. Unless otherwise specified, the price of aggregate will be a part of the unit price of concrete and will not be charged separately.

9.2.7 MIXING WATER

The mixing water shall comply with requirements contained in the standard EN-1008.

Reliable drinking water (tab water) may be used without preliminary verification of acceptability.

The acceptability of non-drinking water that is used for the fabrication of concrete based on initial testing, will have to be checked at least once every three months.

Unless otherwise specified, the price of mixing water will be a part of the unit price of concrete and will not be charged separately.

9.2.8 CHEMICAL ADMIXTURES

Chemical admixtures complying with the standard EN 934 may be accepted.

Only chemical admixtures with conformity certificate evidencing conformity with the mentioned standard, and delivered by an authorized Albanian institution, may be used.

Chemical admixtures not regulated by the mentioned standard may be used subject to the approval of the competent ministry or institution authorized by such ministry.

The conformity is proven by the certification sign. The appearance and use of this sign is regulated by the State Office for Standardization and Metrology, i.e. by its Bylaw on the Appearance and Use of Certification Sign.

Every delivery of admixture to the site must be marked with certification sign (apposed on the packaging), and must be accompanied with a copy of certificate with test report, as well as with the declaration with operating instructions. The instructions must contain all necessary information about the admixture, proportioning limits, type of cement that can be used with the admixture, method of storing and proportioning, and time of validity before use. The acceptability and efficiency of every delivery of chemical admixture must be checked prior to use in actual conditions of use, and in accordance with prevailing regulations.

The storage and use of chemical admixtures must be conducted in accordance with the producer's instructions.

Unless otherwise specified, the price of chemical admixtures will be a part of the unit price of concrete and will not be charged separately.

9.2.9 MINERAL ADMIXTURES

Mineral admixtures defined in the introductory part of this section can be classified as follows:

- almost inert mineral admixtures (Type I),
- pozzolan or latently hydraulic mineral admixture (Type II).

The following Type I mineral admixtures may be used:

- fillers compliant with the standard EN 12620,
- pigments compliant with the standard EN 12878.

The following Type II mineral admixtures may be used:

- flying ash compliant with the standard EN 450,
- silicate dust compliant with the standard EN 13263.

Other mineral admixtures may only be used if found compliant with requirements contained in relevant Albanian standards or with the technical approval issued by the competent ministry or institution authorized by such ministry.

The acceptability of a mineral admixture is proven by the conformity certificate evidencing conformity with an appropriate standard, as issued by an authorized institution, and by the certification mark apposed on its packaging or on the dispatch document.

Composition requirements for concrete

Concrete may be specified as:

- designed concrete (characterized by its properties),
- prescribed concrete,
- standardized composition concrete (with composition defined according to a standard).

The designed concrete is characterized by properties of the fresh and hardened concrete, the prescribed concrete is characterized by the composition specified by the purchaser, and the standardized composition concrete is characterized by the composition specified in an appropriate standard.

The composition of concrete and components for the designed concrete and prescribed concrete must be selected (cf. 7-00.1.3) in such a way that they comply with requirements for the fresh and hardened concrete, including the consistence, density, strength, durability, and reinforcing steel corrosion protection, taking into account the production process and the procedure selected for realization of concreting work, which includes transport, placing, compaction, cure and any other applicable treatment or processing of the placed concrete.

When not precisely specified, the producer shall select types and classes of components among those components that have been determined as acceptable for given environmental conditions.

Unless otherwise specified, the concrete must be designed in such a way to minimize segregation and evacuation of water from the fresh concrete.

The required composition of the designed concrete will be determined through preliminary or initial testing the results of which must meet all requirements for properties of the fresh and hardened concrete compliant with service requirements for structure into which the concrete will be placed. If the producer or concrete composition designer has an appropriated concrete design prepared on the basis of previously performed preliminary (initial) tests, or base on many years of positive experience, then such design can be considered as equal to preliminary or initial testing.

The producer will be responsible for the initial testing of the designed concrete, the composition designer will be responsible for the prescribed concrete, and the standardization body will be responsible for the standardized prescribed concrete.

The initial testing must be conducted prior to the use of the new concrete, i.e. prior to the use of the concrete with new properties or the new concrete family. This testing must be repeated in case of a significant change in concrete components or properties.

The initial testing must be conducted on a fresh concrete at the temperature ranging from 15 to 22° C. In case the concrete is placed in highly varying temperature conditions or if thermal treatment is applied during placing, the producer will have to be notified in order to evaluate influence the concreting conditions could have on concrete properties and to undertake additional tests and measures aimed at maintaining specified properties of the concrete.

Three samples must be taken from every one of three batches to be tested in the scope of initial testing of individual concrete, while the quantity of samples to be tested in the scope of initial testing for the concrete family will have to be designed in such a way to cover concrete composition of the entire range of the concrete family. In the latter case, the number of individual mixes to be tested may be reduced to one mix.

The strength or an another specified property of the mix is an average value of individual test results, and the result of preliminary testing is an average value of results from all mixes. The report must inter alia include the information about the time between concrete mixing and consistence testing, and the loss of consistence as a function of time.

Any differences in the type of mix and mixing procedure used during initial testing and during actual production must be taken into account during evaluation and acceptance of concrete properties, which is particularly important for properties of fresh concrete.

The compressive strength of concrete must be higher than that of the specified class (characteristic compressive strength) by at least a value that ensures conformity with criteria according to these General Technical Requirements, or must be about two times higher than the expected standard deviation, i.e. it should vary from 6 N/mm^2 to 12 N/mm^2, depending on conditions during production, components and available information about earlier uniformity of concrete quality.

Special properties of concrete must be compliant with minimum criteria specified in the design.

The concrete consistence must be within limits of the consistence class at the time of placing or, in case of the ready-mixed concrete, at the time of delivery.

The composition of the standardized prescribed concrete shall be limited to:

- natural normal-weight aggregate,
- mineral additives if they are not included in the cement quantity and w/c ratio calculation,

- components meeting the previously set criteria for initial testing.

9.2.10 SELECTION OF CEMENT

Cement shall be selected among cements of confirmed acceptability, taking at that into account:

- realization of works,
- planned use of concrete,
- curing requirements (e.g. thermal treatment),
- dimensions of the structure (increase in the heat of hydration),
- environmental conditions to which the structure will be exposed (cf. 7-00.1.1),
- potential reactivity of aggregate to alkalis contained in concrete components.

9.2.11 USE OF AGGREGATE

The type of aggregate and its grading and categories, e.g. grain shape, resistance to freezing, resistance to abrasion and quantity of fines, must be selected taking into account:

- realization of works,
- planned use of concrete,
- environmental conditions to which the concrete will be exposed,
- all requirements for the exposed aggregate and final treatment of concrete.

The aggregate whose properties are compliant with the first or second class or category should normally be selected.

The maximum nominal grain size (D_{max}) should be selected taking into account the concrete for the protection of reinforcing steel, and the minimum cross sectional width.

Naturally granular (non-fractioned) aggregate complying with EN 12620 should be used only for concrete belong to the compressive strength class C12/15 or to a lower class.
The aggregate recycled from water-rinsed concrete may be used in concrete fabrication.

The unseparated recycled aggregate should not be added in quantities exceeding 5 percent of the total quantity of aggregate. When the quantity of recycled aggregate exceeds 5 percent of the total quantity of aggregate, then the

aggregate has to be of the type similar to the primary aggregate, and must additionally be separated into coarse and fine fractions, and should also meet requirements contained in EN 12620.

If the aggregate contains silicate varieties of minerals and rocks potentially reactive in contact with alkalis (Na_20 and K_20) originating from cement or an another source, and if concrete will thus be exposed to moisture, then reliable measures must be undertaken to prevent alkali-silicate reactions.

Preventive measures must be adjusted to the geological source of aggregate, taking at that into account previous experience with a particular cement and aggregate combination.

9.2.12 USE OF RECYCLED WATER

The recycled water obtained during concrete production must be used in accordance with the standard EN 1008.

Use of mineral admixtures

Quantities of type I and type II mineral admixtures to be used in concrete must be submitted, prior to their use, to initial testing so as to determine in which way they will influence the strength and other specified properties of concrete.

Type II mineral admixtures compliant with these General Technical Requirements may be included in the concrete composition calculation in relation to cement quantity and w/c ratio (in aggressive environment) provided that they have previously been found acceptable.

Use of chemical admixtures

The total quantity of any chemical admixture must not exceed the maximum quantity recommended by the manufacturer or 50 g of admixture (as supplied) per kg of cement, until the influence of a higher quantity of admixture on the properties and durability of concrete has been checked.

Chemical admixtures added in quantities of less than 2 g per 1 kg of cement may be used only if dispersed in water to be used in concrete fabrication.

If the total quantity of liquid chemical admixtures exceeds 3 l per 1 cubic meter of concrete, then their quantity of water must be taken into account in the w/c ratio calculation.

If more than one chemical admixture is used, then the compatibility of chemical admixtures must be checked in the scope of the initial testing.

High performance superplasticizers must be used in the fabrication of the concrete with plasticity in excess of S4, V4, C3 or F4.

9.2.13 Quantity of chlorides

The quantity of chlorides in concrete, expressed as the percentage of chloride ions in the cement mass, must not exceed the values given for a particular class in Table 7-00.1.2-1.

The calcium chloride, as well as chemical admixtures based on chlorides, must not be added to concrete which contains reinforcing steel, prestressed steel or any other embedded metal.

The quantity of chlorides in concrete shall be determined based on the total content of component materials, using one or both of the following procedures:

- calculation based on maximum nominal chloride content in components, as specified in standards relating to these components, or in producers' declarations,
- calculation based on the quantity of chlorides in concrete components calculated monthly from the mean value of at least 25 chloride quantity determinations plus 1.64 times the calculated standard deviation for every component.

Use of concrete	Chloride content class[1)]	Maximum Cl content in cement[2)]
Does not contain reinforcing steel or other embedded metal, except for corrosion-resistant guides	Cl 1.00	1.00%
Contains reinforcing steel or other embedded metal	Cl 0.20 Cl 0.40	0.20% 0.40%
Contains prestressed steel	Cl 0.10% Cl 0.20%	0.10% 0.20%
[1)] In special conditions of concrete use, the selection of class will depend on provisions valid at the place where the concrete is used.		
[2)] When using type II mineral admixtures included in the calculation of cement quantity, the quantity of chloride will be expressed as percentage of chloride ions in the mass of cement, plus the quantity of calculated mineral admixture.		

Table 83 - Maximum quantity of chlorides in concrete

9.2.14 TEMPERATURE OF CONCRETE

The temperature of fresh concrete must not be lower than 5 degrees Celsius at the time of delivery. When the requirement for a different minimum or maximum temperature of fresh concrete needs to be set, then the tolerance must be specified in addition to such requirement. All requirements relating to artificial cooling or heating of concrete must be agreed between the producer and user prior to delivery.

Requirements related to classes of exposure to environmental actions

Requirements for the concrete resistant to environmental actions are expressed as limit values of concrete composition, as specified properties of concrete, or may be derived from design procedures based on behavior of concrete during use. Requirements must take into account the design working life of the structure.
Limit values of concrete composition

Requirements for every class of exposure must be specified by:

- allowable type and class of components,
- maximum w/c ratio,
- minimum quantity of cement,
- minimum compressive strength of concrete, and,

if relevant by

- minimum air content in concrete,
- special property of concrete relevant to the defined class of the aggressiveness of environment.

In requirements adapted to the place of use, the maximum w/c ratio must be set in 0.05 increments, the minimum quantity of cement must be specified by 20 kg/m^3, and the compressive strength of concrete in

classes given in Table 7- 00.1.1-5 for normal-weight and heavy-weight concrete, and in Table 7-00.1.1-6 for light-weight concrete.
Limit values of concrete properties and composition for individual classes of exposure must meet minimum requirements given in Table 7-00.1.2-2 which imply the use of cement CEM I compliant with EN 197, and maximum grain size ranging from 16 to 32 mm. Minimum strength classes presented have been derived from the relationship between the w/c ratio and the concrete strength class of concrete produced using the cement class 42.5.

Exposure class	Max. w/c ratio	Min. class of strength	Min. quantity of cement, kg/m3
No corrosion risk			
X 0	-	C12/15	-
Corrosion by carbonization			
XC 1	0.65	C20/25	260
XC 2	0.60	C25/30	280
XC 3	0.55	C30/37	280
XC 4	0.50	C30/37	300
Chloride generated (maritime) corrosion			
XS 1	0.45	C35/45	340
XS 2	0.45	C35/45	340
XS 3	0.40	C40/50	360
Chloride corrosion (non-maritime)			
XD 1	0.50	C30/37	300
XD 2	0.50	C30/37	300
XD 3	0.40	C40/50	360
Freezing/thawing with or without deicing salt			
XF 1	0.50	C30/37	300
XF 2	0.50	C25/30	300
XF 3	0.45	C30/37	320
XF 4	0.40	C35/45	360
Chemically aggressive environment			
XA 1	0.55	C30/37	300
XA 2	0.50	C30/37	320
XA 3	0.45	C35/45	360

Table 84 - Limit values of composition and compressive strength classes of concrete

In addition to the above presented approach adapted to EN 206, requirements specified in the following section of these GTR must also be met based on our experience gained in conditions characterized by freezing and thawing, and use of deicing salt.

Aggregate resistant to freezing as per EN 12620, and concrete aerated with min.
5.0 % of micropores of entrained air, must be used in aggressive environment from XF 2 to XF 4.

The sulfate resistant cement must be used when the sulfate aggressiveness inclines towards exposure classes XA 2 and XA 3.

The above limit values guarantee a 50 year working life of concrete. More stringent values (approximately one class higher for additional 20 years), or additional protection measures, would be required if higher durability values are to be set.

If compliant with the previously defined limit values, it can be assumed that the concrete placed in the

structure will meet durability requirements for the intended use under special environmental conditions provided that:

- concrete has been properly placed, compacted and cured in accordance with ENV 13670,
- the minimum thickness of the steel-protection concrete layer complies with provisions of a relevant standard such as ENV 1992-1 with respect to special environmental conditions and maintenance measures.

9.2.15 CONCRETE MIX COMPOSITION DESIGN BASED ON PROPERTIES DURING ITS USE

Requirements for individual exposures classes may also be determined using the design procedure based on durability properties, and may depend on properties significant for determining behavior of concrete (e.g. concrete scaling during the freezing and thawing test).

The process of designing concrete composition based on its behavior in use must include every relevant mechanism of deterioration, working life of a structural element, and criteria that quantitatively define the end of such working life.

If the following minimum parameters are determined in advance:

- type and shape of structure,
- local environmental conditions,
- level of completion,
- required service life,

then it will be possible to apply one of the following procedures for the design of concrete composition based on its behavior in use:

- procedure involving good knowledge of this issue, based on extensive experience with local materials and practices, and detailed knowledge of local environmental conditions,
- procedure based on approved and confirmed testing procedures that represent actual conditions and are backed with approved criteria defining scope of use,
- procedure based on analytical models calibrated according to testing data that reflect actual on site conditions.

For that purpose, in class XF1 of exposure to environmental influences, the concrete must meet requirements for 100 freezing and thawing cycles as indicated in EC2, in exposure class XF3 for 200 cycles, and in exposure classes XF2 and XF2 the concrete must meet requirements for 50 freezing and thawing cycles, and for exposure to deicing salt, as specified in EC2. The testing based on procedures indicated in these standards, and the checking of conformity with these requirements, must be carried out through initial testing for all types (compositions) of concrete, and confirmed by inspections to be carried out at least once a year and at every change in concrete composition. The concrete composition and components must be defined in full detail.

Requirements for fresh concrete

9.2.16 CONSISTENCE

The following procedures must be applied in the scope of concrete consistence determination:

- slump test according to EN 12350-2,
- Vebe test according to EN 12350-3,
- compaction capacity determination according to EN 12350-4,
- Flow table test according to EN 12350-5,
- special procedure to be defined by the Client and producer for special uses (e.g. earth-moist concrete).

As these procedures are quite sensitive outside of the specified consistence values, they should be used for:

- slump test: ≥ 10 mm and ≤ 210 mm,
- Vebe-time: ≤ 30 s and > 5 s,
- compaction level: ≥ 1.04 and < 1.46,
- flow diameter: > 340 mm and ≤ 620 mm.

The consistence of concrete must be determined during the use of concrete or at delivery if ready-mixed concrete is used.

If concrete is delivered in truck mixers or agitating trucks, the consistence can be determined on a representative sample taken from initial delivery. The representative sample of about 0.3 cubic meter of concrete shall be taken after delivery in accordance with EN 12350-1.
The consistence may be set through reference class of consistence or, in special cases, through tolerance values as shown in Table 7-00.1.2-3.**Table 7-00.1.2-3** Tolerances for specified consistence values

Slump test			
Specified range, mm	40	50 to 90	100
Tolerances, mm	± 10	± 20	± 30
Vebe-time			
Specified range, s	⍰ 11	10 to 6	⍰ 5
Tolerances, s	± 3	± 2	± 1
Compactability (compaction level)			
Specified range, sz	⍰ 1,26	1,25 to 1,11	1,10
Tolerances, sz	± 0,10	± 0,08	± 0,05
Flow diameter			
Specified range, mm		All values	
Tolerances, mm		± 30	

Table 85 - Tolerances for specified consistence values

9.2.17 QUANTITY OF CEMENT AND W/C RATIO

If the quantity of cement, water or mineral admixture needs to be determined, this information should be taken (regardless of whether the mix report is available or not) from production data related to mixing (proportioning) instructions.

If the w/c ratio for concrete needs to be determined, it should be calculated based on the determined quantity of cement and an effective quantity of water (for liquid chemical admixtures see 7-00.1.2). The water absorption for normal-weight and heavy-weight aggregate shall be determined according to EN

1097-6, and for light-weight aggregate according to Appendix C to EN 1097-6.

If the minimum quantity of cement is replaced by the minimum quantity of cement + mineral admixture, or if the w/c ratio is replaced with w/(cement + k x mineral admixture) ratio (cf. Section 5.2.5 of EN 206), the procedure will have to be modified as appropriate.

No individual w/c ratio will be allowed to exceed the limit value by more than 0.02.

If the quantity of cement, mineral admixture or w/c ratio of fresh concrete is to be determined by analysis, then the procedure and tolerances must be jointly defined by the mix specifier and the producer.

NOTE: See CEN report CR 13902 *Determination of w/c ratio for fresh concrete*.

Air content

When necessary, the quantity of air in concrete shall be measured in accordance with EN 12350-7 for normal-weight and heavy-weight concrete and according to ASTM C 173 for light-weight concrete. The quantity of air is specified by minimum value. The top limit for air quantity is defined as the minimum value + 4% of the absolute value.

Maximum aggregate grain size

When necessary, the maximum aggregate grain size in fresh concrete will be determined in accordance with EN 933-1.

The maximum nominal grain size of aggregate defined according to EN 12620 must not be greater than the specified value.

9.2.18 REQUIREMENTS FOR HARDENED CONCRETE

Strength

When necessary, the strength of concrete will be tested on 150 mm cubes or on test cylinders measuring 150 x 300 mm in accordance with EN 12390-1, and the sample will be fabricated and cured according to EN 12350-1 and EN 12390-2.

When compressive strength of concrete is to be defined, it should be expressed as $f_{c,koc}$ when cubes are used in the testing, and as $f_{c,valj}$ when test cylinders are used according to EN 12350-1.
Before the testing commences, the producer shall determine whether the compressive strength will be accepted based on cube or cylinder testing.

Unless otherwise specified, the compressive strength will be determined on samples tested at 28 days. In special cases the compressive strength will be determined at concrete age of more or less than 28 days, or after being kept in special conditions (e.g. after thermal treatment).

The characteristic compressive strength of concrete must be equal or higher than the characteristic compressive strength required for the specified class of compressive strength

If it can reasonably be expected that the specified compressive strength testing for concrete will not result in representative values, e.g. in case of concrete consistence CO, or more rigid that S1, or in case of vacuum concrete, then the testing procedure may be modified or the compressive strength of concrete may be determined in the structure or on a structural element.

The acceptance of strength in the structure or structural element shall be conducted in accordance with EN 13791.

The splitting tensile strength shall be determined in accordance with EN 12390-6. Unless otherwise specified, the splitting tensile strength shall be determined on samples tested at 28 days.

The characteristic splitting tensile strength of concrete shall be equal or greater than the specified splitting tensile strength.

Density

According to its density in dry state, concrete can be defined as normal-weight concrete, light-weight concrete and heavy-weight concrete (cf. definitions). When required, the density of concrete in dry state shall be determined in accordance with EN 12390-7.

The density of normal-weight concrete in dry state must be higher than 2000 kg/m^3 but shall not exceed 2600 kg/m^3. The density of light-weight concrete in dry state shall be situated within limits set for a particular class (cf. Table 9 in EN 206). The density of heavy-weight concrete in dry state shall be greater than 2600 kg/m^3. If the density is defined as a specified value, then the tolerance of 100 kg/m3 shall be applied.

Resistance to water penetration

Water permeability of concrete shall be tested in accordance with EN 7031, and the conformity criteria shall be defined by the mix specifier in concert with the producer. Generally, the water should not penetrate into the sample by more than 50 mm, and an average value of such penetration should not exceed 20 mm.

Fire resistance

The concrete composed of natural aggregate, cement, chemical admixtures, mineral admixtures or other inorganic materials shall be classified into the European class A and does not need to be tested[1].

Other properties of concrete

If other properties of concrete must be determined by testing (such as resistance to freezing, resistance to freezing and deicing salt, resistance to wear, etc.), the procedure and conformity criteria must be defined by the mix specifier in concert with the producer.

9.2.19 CONCRETE QUALITY REQUIREMENTS

The concrete quality specifier must make sure that all relevant properties of concrete are included in requirements i.e. in the specification submitted to the producer. Such specification should include appropriate requirements for concrete properties at all times, i.e. during transport, after delivery, during placing, compaction, cure or with respect to any other treatment. If necessary, such specification will include special requirements (e.g. for architectural finish/treatment).

[1] Decision of the European Commission (94/611/EC of September 9, 1994) published in the Official Journal of the European Union, No. L241/Sep. 29, 1994.

The concrete quality specifier shall take into account:

- use of fresh and hardened concrete,
- curing conditions,
- dimensions of the structure (rise of the heat of hydration),
- all requirements for rustic terrazzo or surfaces treated with appropriate tools,
- all requirements for concrete for the protection of reinforcing steel or minimum cross sections, e.g. maximum nominal grain size of aggregate,
- all limitations relating to the use of acceptable components, such as those arising from the exposure class requirements.

Concrete should be specified as either designed concrete according to general classification, or as concrete of specified composition (prescribed concrete) for

which composition has to be defined. The basis for designing or prescribing a concrete composition shall be results from initial tests, or information obtained from long-term experience with comparable concrete, taking into account the basic reqiirements for constituent materials and concrete composition.

In case of prescribed concrete the specifier has to ensure that the requirements are generally compliant with EN 206 and that the specified composition will result in required properties of concrete in both fresh and hardened state. The specifier is required to keep and regularly update accompanying documentation relating to concrete behavior.

In case of standardized concrete of defined composition (standardized prescribed concrete), the responsibility is vested in the national institution for standardization. For the concrete of specified composition, the evaluation of conformity is exclusively based on specified composition, rather than on properties required by the specifier.

9.2.20 REQUIREMENTS FOR DESIGNED CONCRETE

The designed concrete will be specified by principal data (basic requirements) and, when required, by some additional information (additional requirements).

Basic requirements

The requirements must include:

a) data compliant with EN 206,
b) class of compressive strength,
c) class of exposure,
d) maximum nominal upper aggregate size,
e) class of chloride content.

Additional requirement for light-weight concrete:

f) density class or target density

Additional requirement for heavy-weight concrete:

g) target density

Additional requirement for ready-mixed concrete and site-mixed concrete:

h) consistence class or, in special cases, a target value for consistence.

Additional requirements

The following requirements may be specified with respect to behavior during working life or in relation to testing procedures:

- special type or class of cement (e.g. low hydration heat cement),
- special type or class of aggregate,
- properties needed to ensure resistance to freezing, e.g. quantity of air including possible losses during pumping, placing, compaction i.e. during activities occurring after delivery,
- temperature of fresh concrete,
- increase in strength,
- rise of heat of hydration,
- retarded stiffening,
- resistance to water penetration,
- resistance to freezing,
- resistance to freezing and deicing salt,
- resistance to abrasion,
- splitting tensile strength.

Requirements for prescribed concrete

The concrete of specified composition is defined by principal requirements and, in special conditions, by additional requirements.

Principal requirements

a) data compliant with EN 206,
b) quantity of cement,
c) cement type and strength class,
d) w/c ratio or consistence class for fresh concrete and, in special cases, a target value,
e) aggregate type and class; in case of light-weight or heavy-weight concrete an appropriate maximum or minimum density must be specified,
f) maximum nominal aggregate size and grading limitations,
g) type and quantity of chemical or mineral admixtures, if any,
h) if chemical or mineral admixtures are added, their source and source of cement, as well as an approximation of properties that can not be characterized in an another manner.

9.2.21 ADDITIONAL REQUIREMENTS

Additional requirements may be:

- source of all or some of concrete components in order to obtain properties that can not be obtained by specifying other features,
- additional requirements for aggregate,
- temperature of fresh concrete,
- other technical requirements.

Requirements for standardized prescribed concrete

The standardized prescribed concrete must be specified by

- referring to standard in which it is described, and by specifying relevant requirements,
- specifying concrete in the standard.

The standardized prescribed concrete will only be used for:

- normal-weight concrete placed in nonreinforced and reinforced concrete structures,
- designed classes characterized by compressive strength of C 16/20,
- classes of exposure X0 and XC1.

Concrete classes of up to 20/25, destined for the fabrication of nonreinforced elements and structures, which are fabricated at the place of production, and are defined only with the class of concrete shall be fabricated, in case of maximum aggregate fraction from 16 to 32 mm, using the following quantities of cement class 32.5 (kg/m3 of placed concrete):

C 8/10	220
C 12/15	260
C 16/20	300
C 20/25	350

When cement class 42.5 is used, the above cement quantities shall be reduced by 10% and increased by:

- 10% at maximum aggregate fraction from 8 to 16 mm,
- 20% at maximum aggregate fraction from 4 to 8 mm,
- 20% at liquid consistence.

The inspection and confirmation of conformity of these concrete types shall be carried out exclusively by inspection of concrete composition in accordance GTR.

9.2.22 DELIVERY OF FRESH CONCRETE

Information to be submitted to the producer by the concrete user

The user will define, together with the producer:

- delivery date, time and rate,

and, when necessary, the user will inform the producer about:

- special transport to the construction site,
- special construction procedures,
- limitations of the transport vehicle, such as type (agitating or non-agitating truck), size, height or gross weight.

Information to be submitted to the concrete user by the producer

When ordering concrete, the user may require information about composition of the concrete mix so that he can apply an appropriate method for placing and protection of fresh concrete and to correctly anticipate development of concrete strength.

When asked by the user, the producer shall provide the requested information prior to the delivery of concrete, in accordance with the user's wishes. When requested to do so, the producer shall provide the following information for the designed concrete:

a) type and strength class of cement and type of aggregate
b) type of chemical admixture, type and approximate quantity of mineral admixture, if any,
c) target w/c ratio,
d) relevant results obtained during preliminary (initial) testing of the mix, e.g. results of the inspection during production or results of initial testing,
e) strength development,
f) source of components (constituent materials).

In case of ready-mixed concrete, the information - if required - may also be given in form of the producer's catalogue of concrete mixes, in which details are given about strength classes, consistence classes, mix weight, and other relevant data.

Information about the time of concrete protection based on the rise of concrete strength may be expressed through designations contained in Table below or by the curve of concrete strength rise at 20°C for the period between 2 and 28 days.

Table. Rise of concrete strength at 20°C

Strength development	Estimate of strength ratio $f_{cm,2}/f_{cm,28}$
Rapid	0.5
Medium	0.3 and 0.5
Slow	0.15 and 0.3
Very slow	0.15

The strength ratio, as an indicator of the rise in strength, is the relationship between the intermediate value of compressive strength after 2 days ($f_{cm,2}$) and the intermediate value of compressive strength after 28 days ($f_{cm,28}$), as determine by initial testing or based on known properties of a concrete of comparable composition. In such initial tests, samples used in strength determination shall be prepared, cured and tested in accordance with EN 12350-1, EN 12390-1, EN 12390-2 and EN 12390-3.

The producer is required to inform the user about any health risk that may occur during concrete handling.

Delivery ticket for the ready-mixed concrete

When delivering the concrete, the producer must submit to the user the delivery note for concrete delivered by any means of transport, and the following minimum information must be either stamped or written in that delivery note:

- name of concrete plant,
- serial number of delivery ticket,
- date and time of transport, i.e. the time of first contact between cement and water,
- number of vehicles,
- name of purchaser,
- name and location of construction site,
- details about or reference to requirements, i.e. code number, designation number,
- quantity of concrete in cubic meters,
- declaration of conformity with referenced quality requirements and EN 206,
- name or sign of certification body, if relevant,
- time when the concrete will arrive at the construction site,
- time of the start of unloading,
- time of the end of unloading.

In addition, the delivery ticket must contain the following details:

a) for the designed mix:

- strength class,
- exposure class,
- consistence class or target value,
- limit values for concrete composition, if such values are set,
- cement type and strength class, if specified,
- type of chemical and mineral admixture, if specified,
- special properties, if required,
- maximum nominal upper aggregate size,
- in case of light-weight or heavy-weight concrete, density class or target density.

b) for the prescribed mix:

- details about composition, such as quantity of cement, type of chemical admixture, if any,
- w/c ratio or class or specified consistence value, if required,
- maximum aggregate size.

In case of the standardized prescribed concrete, the data complying with the relevant standard must be provided.

Delivery information for site-mixed concrete

The information required for concrete delivery ticket is also appropriate for concrete produce on a big construction site, or when several concrete types are used.

Consistence at delivery

In general terms, it is not allowed to add water or chemical admixtures during delivery. In some special cases the water or chemical admixtures may be added under the producer's responsibility and when this is necessary to obtain the specified consistence value, provided that the specified limit values are not exceeded and that addition of chemical admixture is included in the concrete mix design. The quantity of water or chemical admixture added to the vehicle (truck mixer) must be recorded in the delivery ticket in all cases.

If the quantity of water or chemical admixtures added on the construction site exceeds the quantity allowed according to specifications for such mix or for the quantity of concrete in the mixer, then the note "non-compliant" shall be entered in the dispatch document. The person that authorized such addition shall be responsible for any consequences thereof, and his name shall be entered in the dispatch document.

9.2.23 VERIFICATION OF CONFORMITY AND CONFORMITY CRITERIA

The verification of conformity includes activities and decisions to be made in accordance with conformity criteria defined in advance, in order to check conformity of concrete with specified requirements. The verification of conformity is an integral part of the production control.

Concrete properties used in the verification of conformity are the properties that are measured through appropriate tests based on standard procedures. Actual values of concrete properties when concrete has been placed in the structure may vary from tested values, depending on the size of the structure, placing, compaction, curing and climatic conditions.

The sampling and testing plan and conformity criteria must be in accordance with provisions contained in these GTR. These provisions should also be applied for the concrete of precast elements unless an equivalent set of provisions is specified in a separate standard relating to such product. If a more frequent sampling is required, it will be subject to prior approval. Properties not covered by these sections, by sampling and testing plan, test procedures and conformity criteria, must be jointly defined by the producer and the specifier.

The place of sampling for compliance testing must be selected in such a way that relevant concrete properties and concrete composition do not significantly change from the place of sampling to the place of delivery. In case of light-weight concrete produced with unsaturated aggregate, the samples must be taken at the place of delivery.
When production control tests are similar to tests made in the scope of conformity verification, then the former tests shall be taken into account in conformity verification. The producer may also use other delivered-concrete test results in conformity verification.

The conformity or non-conformity is defined based on conformity criteria. Non- conformity may result in other actions to be taken at the place of production and at the construction site.

9.2.24 CONFORMITY VERIFICATION FOR DESIGNED CONCRETE

Conformity verification for compressive strength

In case of normal-weight and heavy-weight concrete belonging to strength class from C8/10 to C55/67, or light-weight concrete belonging to class C55/60, the sampling and testing must be conducted by individual

concrete compositions or by concrete families of determined similarity, in the manner defined by the producer, unless otherwise specified. The family concept shall not be applied for higher concrete classes. The light-weight concrete must not be grouped in families which are related to normal-weight concrete; light-weight concrete with aggregates of proven similarity may be grouped in its own family.
Instructions for the selection of concrete families are given in EN 206 (Appendix K).

In case of concrete families, the producer must test all members of the family and the sampling must be conducted in the entire range of concrete compositions produced within a family.

When the concrete conformity testing is applied to a concrete family, then the reference concrete is selected, which is usually the concrete that is produced the most or the concrete from the middle range of the concrete family. Then the correlation is established between each individual concrete composition in the family and the reference concrete so that every individual compressive strength result for every individual concrete can be calculated in relation to the reference concrete. The correlation will have to be revised based on original results obtained by compressive strength testing in every period of acceptance, and when visible changes are noted in production conditions. Furthermore, when checking compliance of a family, it should also be determined whether every individual member actually belongs to the family.

The initial production will be differentiated from continuous production in the sampling an testing plan and with respect to conformity criteria for individual concrete compositions within concrete families.

The initial production is the production covering the period until at least 35 test results are obtained.

The continuous production is achieved when at least 35 test results have been obtained in the period of no more than 6 months.

If the production of a particular concrete composition or concrete family has been suspended for more than 6 months, then the producer has to adjust criteria and the sampling and testing plan to those given for the initial production.

In the course of continuous production the producer may adjust the sampling and testing plan and criteria valid for initial production to those valid for continuous production.

If the strength is specified for a different age of concrete, then the conformity will be evaluated on samples tested at such specified age of concrete.

Provisions contained in EN 206 (Annex B) will be applied in cases when identity has to be checked for a particular quantity of concrete with population meeting characteristic strength requirements, i.e. if the quality of a mix or delivery is doubtful or if in special cases it is specified in the design.

Concrete samples shall be selected at random in accordance with provisions contained in EN 12350-1. Sampling shall be conducted in every concrete family that has been produced in conditions considered to be similar. The minimum number of samples must be set in accordance with Table below, taking as relevant the value giving greater number for either initial or continuous production, as appropriate.

Table. Minimum rate of sampling for assessing conformity

	Minimum rate of sampling	
		After the initial 50 m^3 of production[1)]

Production	Initial 50 m^3 of production	Concrete with certified production control	Concrete without certified production control
Initial (until at least 35 results are obtained)	3 samples	1/200 m^3 or 2/production week	1/150 m^3 or 2/production day
Continuous[2)] (after at least 35 results are obtained)		1/400m^3 or 1/production week	

[1)] Sampling must be distributed evenly throughout the production and no more than one sample should be taken per every 25 m^3.

[2)] When the standard deviation in at least 15 test results is above 1.37s, then the frequency shall be increased to that required for initial testing for the next 35 test results.

Regardless of sampling requirements given, samples will have to be taken each time the water or chemical admixture is added under control and responsibility of the producer, and sampling will be allowed before the plasticizer or superplasticizer is added for consistence adjustment purposes if it is proven by initial testing that the plasticizer or superplasticizer will not negatively affect the strength of concrete if added in specified quantity.

Test result is either the result obtained by testing a particular sample, or an average result obtained by simultaneous testing of two or more samples taken from the same sample batch.

When two or more samples originating from the same sample batch differ for more than 15 percent from the average value for the sample batch, then these samples shall be discarded unless it is proven by analysis that there is an acceptable reason why any of them should be accepted.

The conformity should be estimated based on test results obtained in the evaluation period of no more than 12 preceding months.

The conformity of compressive strength of concrete will be estimated based on samples tested at 28 days[2] for:

- groups of "n" successive test results (f_{cm}) (criterion 1),
- each individual result (f_{ci}) (criterion 2).

[2] if the strength is specified for a different age, the conformity will be checked for samples tested at that age.

The conformity is confirmed if both criteria from Table 7-00.1.5-2 have been met for the initial and for the continuous production.

When the conformity is confirmed based on concrete families, then the criterion 1 is applied to the reference concrete taking into account all calculated test results within the family; criterion 2 is applied to original test results.

In order to confirm that each individual member belongs to the family, the average value of all unmodified test results (f_{cm}) should be estimated for an individual family member based on criterion 3 shown in Table 7-00.1.5-3. Every concrete that does not meet this criterion must be removed from the family and its conformity shall be analyzed separately.

Conformity criteria for compressive strength

Production	Number of "n" compressive strength test results in a group	Criterion 1	Criterion 2
		Mean of "n" results (f_{cm}), N/mm^2	individual result (f_{ci}), N/mm^2
Initial	3	⍰ fck + 4	⍰ fck - 4
Continuous	15	⍰ fck + 1.48s	⍰ fck - 4

Table 86 - Conformity criteria for compressive strength

In the beginning, the standard deviation (s) should be calculated based on at least 35 successive test results obtained in the period of more than three months, which immediately precedes the production period for which the conformity is being checked. This value should be taken as the established standard deviation of the population. The validity of the accepted value should be checked during the ensuing production.

Confirmation criterion for family members

Number "n" of test results for compressive strength for a single concrete	Criterion 3
	Average of "n" results (fcm) for a single family member. N/mm^2
2	⍰ f_{ck} - 1.0
3	⍰ f_{ck} + 1.0
4	⍰ f_{ck} + 2.0
5	⍰ f_{ck} + 2.5
6	⍰ f_{ck} + 3.0

The value "s" may be determined according to two methods. The method to be used must be selected in advance.

Method 1

The initial value of standard deviation may be applied for the oncoming period during which the conformity will be checked by ensuring that standard deviation of at least 15 results (S_{15}) does not greatly differ from the accepted standard deviation. This principle is valid for:

$$0.63\ s < S_{15} < 1.37\ s$$

When the value S_{15} is outside of the specified limits, a new value must be determined based on the last 35 test results.

Method 2

The new value s can be determined from the continuous composition and this value will be accepted. The sensitivity of the system must be at least equal to that given in Procedure 1.

The new s value will be determined for the new evaluation period.

Conformity verification for the splitting compressive strength

When the splitting compressive strength of concrete is specified, the conformity shall be checked based on test results obtained during the evaluation period which must not be longer than the last twelve months.

The conformity of the splitting tensile strength of concrete will be checked on samples tested at 28 days, unless otherwise specified, for:

- group of "n" successive test results (f_{vm}) (criterion 1),
- each individual test result (f_{vi}) (criterion 2).

The conformity with the characteristic splitting tensile strength of concrete (f_{vk}) is confirmed if test results meet both criteria from Table below for the initial and for the continuous production.

Conformity criteria for the splitting tensile strength

Production	Number "n" of results in a group	Criterion 1	Criterion 2
		Mean of "n" results (fcm), N/mm2	individual result (fci), N/mm2
Initial	3	≥ fck + 0.5	≥ fck - 0.5
Continuous	15	≥ fck + 1.48s	≥ fck - 0.5

Provisions for standard deviation specified in shall be applied when appropriate.

Property	testing or examination procedure	Minimum number of samples or examinations	Number of acceptances	Maximum allowable deviation of individual test results from individual class limits or specified tolerances	
				Top limit	Bottom limit
Density of heavyweight concrete	EN 12390-7	as in Table 7-00.1.5-1 compressive strength	cf. Table 7-00.1.5-7a	-30 kg/m³	no limitation[1)]
Density of light-weight concrete	EN 12390-7	as in Table 7-00.1.5-1 for compressive strength	cf. Table 7-00.1.5-7a	-30 kg/m³	+30 kg/m³
w/c ratio	cf. 7-00.1.2	once a day	cf. Table 7-00.1.5-7a	no limitation	0,02
Quantity of cement	cf. 7-00.1.2	once a day	cf. Table 7-00.1.5-7a	-10 kg/m³	no limitation[1)]
Entrained air in fresh concrete	EN 12350-7 for normal concrete ASTM C173 for light-weight concrete	once a day (when production is stable)	cf. Table 7-00.1.5-7a	-0,5 % of absolute value	+1,0 % of absolute value
Quantity of chlorides in concrete	cf. 7-00.1.2	for every concrete composition and again if the chloride quantity increases in any component	0	no limitation[1)]	higher value not allowed

[1)] Until limitations are specified

Table 87 - Conformity criteria for other properties

Conformity verification for other and special properties

The term "other properties" denotes (except for concrete strength) properties given in Tables below which are mainly related to fresh concrete and are checked in fresh concrete, while "special properties" are properties of hardened concrete based on our former regulations, which characterize the durability, i.e. behavior of concrete during use (water permeability, resistance to freezing, resistance to freezing and deicing salt, etc.).

Other properties

Concrete samples for checking conformity of other properties shall be selected at random and taken in accordance with EN 12350-1. The sampling must be conducted at every concrete family produced in conditions that are considered to be equal. The minimum number of samples and test procedures must be in accordance with Tables below.

Testing procedure		Minimum number of samples or examinations	Number of acceptances	Maximum allowable deviation of individual test results from individual class limits or specified tolerances	
				Bottom limit	Top limit
Visual inspection	Comparison between actual and specified appearance of concrete	each mix, for vehicles each contingent	-	-	-
Slump	EN 12350-2	i) frequency as in Table 7-00.1.5-1 for compressive strength ii) at air quantity check	cf. Table 7-00.1.5-7b	- 10 mm	+ 20 mm
		iii) in case of doubt, according to visual inspection		- 20 mm[2)]	+ 30 mm[2)]
Time of vibration	EN 12350-3		cf. Table 7-00.1.5-7b	- 4 sec	+ 2 sec
				- 6 sec[2)]	+ 4 sec[2)]
Level of compaction	EN 12350-4		cf. Table 7-00.1.5-7b	- 0,05	+ 0,03
				- 0,07[2)]	+ 0,05[2)]
Flow dia.	EN 12350-5		cf. Table 7-00.1.5-7b	- 15 mm	+ 30 mm
				- 25 mm[2)]	+ 40 mm[2)]

[1)] These deviations are not applicable when there are no top and bottom limitations.
[2)] Applicable only for consistence measurement from the start of vehicle unloading (cf. 7-00.1.2).

Table 88 - Conformity criteria for consistence

The conformity of other properties of concrete shall be assessed during production, i.e. within the time of conformity determination which must not exceed the preceding period of six months.

The conformity of concrete is considered satisfactory if specified test criteria have been met with respect to specified limit values, class limit values or specified values, including tolerances sand maximum allowable deviation from specified values.

The conformity of a property is considered confirmed if:

- the number of test results exceeding specified limit values or class limits or tolerances, as appropriate, is not greater than the acceptable number as given in Tables of this section.

Table 7-00.1.5-7a - AQL = 4%		Table 7-00.1.5-7b - AQL = 15%	
Number of test results	Acceptable number	Number of test results	Acceptable number
1 - 12	0	1 - 2	0
13 - 19	1	3 - 4	1
20 - 31	2	5 - 7	2
32 - 39	3	8 - 12	3
40 - 49	4	13 - 19	5
50 - 64	5	20 - 31	7
65 - 79	6	32 - 49	10
80 - 94	7	50 - 79	14
95 - 100	8	80 - 100	21
When the number of test results exceeds 100, the corresponding acceptable numbers may be taken from the Table II-A given in ISO 2859-1:1989.			

Table 89 - Conformity criteria for consistence

Special properties

Concrete samples for the evaluation of special properties which characterize durability, i.e. behavior of concrete when used in aggressive environment, shall be taken and tested in accordance with applicable Albanian standards.

In this respect, for exposure to environmental influences defined in aggressiveness class XF1 according to these General Technical Requirements, the concrete has to comply with criteria for resistance to freezing during 100 cycles as given in EC2, for exposure to aggressiveness class XF3 the concrete has to withstand freezing during 200 cycles, and in aggressiveness classes XF2 and XF4 it has to meet requirements for resistance to freezing and deicing salt during 50 cycles according to EN. These tests based on procedures described in the above standards, as well as relevant audit tests, must be carried out during initial (preliminary) tests for every concrete (composition) for a specified purpose and within the control procedure, at least once a year as well as at every change in concrete composition that is likely to influence such properties.

If any other special properties of concrete need to be tested, then such properties will be defined by the specifier who will determine the procedure, frequency of testing and acceptance criteria, if not already specified in appropriate Albanian standards.

Conformity verification for prescribed concrete and for standardized prescribed concrete

The conformity of each batch of prescribed concrete shall be determined based on the quantity of cement, maximum nominal aggregate size, if specified, and, if necessary, based on the w/c ratio, and the quantity of chemical or mineral admixtures.

The quantities of cement, aggregate (every specified fraction) and mineral admixtures, that are specified in the producer's report or set in the concrete plant declaration, must be within tolerances specified in Table above, and the water/cement ratio must be within the specified limits (up to 0.04 of the specified value).

In case of standardized prescribed concrete, pertinent values may be given in appropriate standards.

When the conformity of composition is to be proven by analysis of fresh concrete, the producer and the user must jointly define testing procedures and limit values taking into account specified limits and

accuracy of testing procedures.

When the conformity of consistence is to be proven, then the requirements specified in these Technical Requirements must be applied.

For :

- type and class of cement,
- type of aggregate,
- type of chemical or mineral admixture, if any,
- sources of components, if chemical or mineral admixtures are used

the conformity must be determined by comparing the producer's report and dispatch document for components, with specified data.

Measures to be taken in case of non-conformity

If a product is found non-compliant, the following measures must be taken:

- test results must be checked and, if inaccurate, steps must be taken to eliminate errors,
- if non-conformity is confirmed e.g. by repeated testing, then the corrective action must be taken, which should include managerial revision of the inspection program,
- if non-conformity is related to quality requirements, and the error is not related to the delivery process, then the specifier and user must be informed abut the situation in order to avoid any harmful effects.
- report about the above issues must be produced.

If non-compliance is due to the addition of water or chemical admixture (cf. 7- 00.1.4) on the construction site, the producer must take appropriate corrective measures but only if he has approved such addition.

If the producer has reported that the concrete is non-compliant, or if conformity tests show that requirements have not been met, then additional testing according to EN 12390-8 must be conducted using test cylinders from the structure or structural elements, or cylinder testing must be combined with non- destructive testing on structure or structural elements, e.g. in accordance with EN 12390-9 or EN 13296.

Instructions relating to strength requirements for structures or structural elements are given in EN 13791.

The method for measuring and calculating delivered quantities of concrete, and the method for compensating the Client, in case non-compliance of a delivered concrete batch is confirmed, must be specified in advance by the concrete producer or suppler and the Client (purchaser).

9.2.25 PRODUCTION CONTROL

The producer is responsible for the flawless production of concrete. All concrete must be subject to production control.

The production control includes all measures that are needed to maintain properties of concrete fully compliant with required properties.

This includes:

- selection of materials,
- concrete design,
- concrete production,
- inspection and testing,
- use of test results for components, fresh and hardened concrete and equipment,
- conformity control based on requirements given in these General Technical Requirements.

Requirements for other aspects of production control are specified in this section. When deciding on the use of these requirements, one should bear in mind the type and scope of production, as well as the work process and equipment used. Additional requirements may be specified for some special circumstances at the place of production, or if specific requirements are specified for a particular structure or structural element. This Section was prepared in accordance with principles set in the series of standards contained in EN ISO 9000.

Production control systems

Individual responsibilities, competent bodies, and relationships among persons managing, realizing and verifying works related to the quality of concrete, must be defined through a documented production control system. This particularly concerns persons requiring organizational freedom and authority in order to minimize risk that would arise from unsatisfactory concrete, and to identify and report any problem relating to the quality of concrete.

The producer is required to revise the production control system at least every other year so as to provide for its continued efficiency and applicability. Revision reports must be archived for at least 3 years, except when longer periods are specified in applicable regulations.

The production control system must contain appropriate and properly documented procedure and instructions. This procedure and instructions shall be checked when necessary, taking at that into account required actions as specified in tables 22, 23 and 24 of the EN 206. The planned frequency of testing and inspection must be documented. Results obtained by testing and inspection must be presented in appropriate reports.

Recorded data and other documents

All relevant production control data must be recorded (i.e. contained in appropriate reports, cf. Table below). Production control reports must be archived for at least 3 years, except when longer periods are specified in applicable regulations.

Subject	Recorded data and other documents
Specified requirements	contract conditions or overall requirements
Cement, aggregate, chemical admixtures, mineral admixtures	Name of supplier and source
Testing mixing water (not required for drinking water)	- date and place of sampling, - test results
Testing of components	testing date and test results

Composition of concrete	- description of concrete - report on the weight of components in the mix or contingent (e.g. quantity of cement), - water/cement ratio, - chloride content, - mark of family member.
Fresh concrete testing	- date and place of sampling, - position within structure, if known, - consistence (procedure used and results), - density, - temperature of concrete, when required, - quantity of air, when required, - quantity of tested mix or contingent, - number and designation of sample to be tested, - water/cement ratio, when required
Hardened concrete testing	- date of testing, - designation and age of samples, - results obtained by testing density, hardness and special properties - special notes (e.g. unusual error on a sample)
Evaluation of conformity	conformity/non-conformity with requirements
Additionally for ready- mixed concrete	- name of purchaser, - location of construction site, - number and dates of delivery tickets with tests, - delivery tickets
Additionally for precast elements	additional or other data may be specified in a standard applicable to the product

Table 90 - Recorded data and other relevant documents

9.3 TESTING

Tests must be conducted in accordance with testing procedures specified in standards defined in EN 206 (reference testing procedures), although other testing procedures may be used if correlation or reliable relationship is determined between results obtained by such testing procedures and reference procedures.

The validity of such relationships or correlations must be checked in appropriate intervals. Every place of production operating in different conditions must separately be checked.

Composition of concrete and initial testing

An initial testing must be conducted for every new concrete composition in order to obtain concrete whose properties will remain within the specified range. Such initial testing is not required when appropriate experience based data from a sufficient time period are available for a particular composition or family of concrete. The concrete composition design or design criteria must be reexamined when there is a significant change in concrete components. Producer's preliminary tests are not required in case of specified-composition mix or standardized-composition mix.

The new concrete composition obtained by interpolation of known concrete compositions or by extrapolation of compressive strength not exceeding 5 N/mm^2, can be considered compliant with initial testing requirements.

Concrete compositions must periodically be revised in order to make sure that all design mixes are still

compliant with actual requirements, taking into account any change in the properties of materials and results obtained by testing conformity of concrete composition.

Personnel, equipment and plant

The knowledge, skill and experience of personnel involved in the production and production control must be compliant with the type of concrete (e.g. high strength concrete, lightweight concrete, etc.).

Appropriate records must be kept about the skill and experience of personnel involved in the production and production control.

Components must be stored and used in such a way that their properties are not significantly altered by influences such as climate, mixing or pollution, and that they remain compliant with an appropriate standard.

Storage compartments must clearly be marked in order to avoid any error or mistake in the use of components.

All special instructions given by the producer must strictly be observed.

Sampling from storage spaces such as storage piles, silos and other storage facilities, must be allowed.

Properties of the mixing equipment must be such that accuracy requirements specified in these General Technical Requirements are met and that conformity with them is maintained.

As of January 1, 2003 the accuracy of weighing equipment has to meet accuracy criteria specified in the Directive 90/384/EEc, measured according to EN 45501:1992 at least for class III for cement, aggregate, water, and chemical and mineral admixtures.

The number of measuring intervals on the verification scale of weighing equipment must be:

- at least 1000 for chemical admixtures,
- at least 500 for cement, aggregate, water and mineral admixtures.

The accuracy of volume measuring equipment must comply with accuracy requirements.

The existing mixing equipment not complying with such requirements may be used until if it complies with relevant national regulations that are currently in force.

Mixers must enable uniform distribution of components and uniform workability of mix within mixing intervals and capacity of the mixer.

Truck mixers and agitating equipment must be equipped in such a way that the concrete can be delivered to the site in a homogeneous condition. They must additionally be equipped with appropriate measuring equipment and equipment for the dispersion of water and chemical admixtures, if the water or chemical admixtures are added on site under the producer's responsibility.

All necessary facilities, equipment and instructions for the proper use of testing equipment must be accessible to the inspection team which must be allowed to inspect equipment, concrete components and concrete.

Relevant testing equipment must be properly calibrated at the time of testing, and the producer is responsible for the realization of an appropriate calibration program.

Batching of concrete components

Written instructions with detailed information on the type and quantity of components must be available and readily accessible at the place where mixing is performed.

Mixing tolerances must not exceed limit values presented for all concrete quantities equal to or in excess of one cubic meter. When the specified number of batches is mixed or re-mixed in a mixer, the tolerances given will be applied for the entire contingent.

Components	Tolerances
Cement Water Total aggregate Mineral admixtures (5 percent of the cement weight)	3 percent of the specified quantity
Chemical and mineral admixtures (5 percent of the cement weight)	5 percent of the specified quantity
Note: The tolerance is the difference between the specified value and the measured value.	

Table 91 - Tolerances for mixing of concrete components

The cement, aggregate and mineral admixtures in powder shall be proportioned by weight. Other procedures may also be used if their accuracy is at least as good as the specified accuracy and if it is properly documented.

The mixing water, lightweight aggregate, chemical admixtures and liquid mineral admixtures may be proportioned either by weight or by volume.

Concrete mixing

Concrete components must be continuously mixed in the mixer complying with requirements contained in Section 7-00.1.6 of these General Technical Requirements, until an uniform appearance of the mix is obtained. The quantity of material in the mixer must not exceed the declared mixing capacity of the mixer.

When chemical admixtures are used, they shall be added during the principal mixing procedure, except for superplasticizers or plasticizers which may be added after the end of the principal mixing procedure. In the latter case the concrete must be remixed until the chemical admixture has fully dispersed in the mix or contingent, and until its full efficiency has been reached. In the truck mixer, the duration of remixing after the end of the principal mixing procedure must not be less that 1 min/m^3 nor less that 5 minutes following the addition of the admixture.

In case of lightweight concrete prepared with nonsaturated aggregate, the time from initial mixing to the end of the final mixing (e.g. re-mixing in the mixer), must be extended until such time when the water absorbed by the aggregate, and evacuation of air from lightweight aggregate, can no longer significantly influence properties of the hardened concrete.

The composition of the fresh concrete must not be modified after it has been discharged from the mixer.

Production control sequence

Components, equipment, production procedure and concrete must be controlled in accordance with conformity criteria and as specified in these General Technical Requirements. This control must be conducted in such a way that any major changes likely to influence the properties can be revealed, and that appropriate corrective actions can be taken.

The type and frequency of inspection/testing of components shall be compliant with instructions given in EN 206, Table 22.

This table is based on the assumption that an appropriate production control of components is already applied, that such control is made at the producer's place of production, and that components have been delivered with the declaration or certificate evidencing conformity with relevant requirements. If such document is missing, the concrete producer is required to control whether components are compliant with appropriate standards.

The control of equipment must be conducted in such a way to ensure that the storage areas, measuring devices, mixer and controlling devices (e.g. device for measuring moisture of aggregates) are in good working condition and that they meet requirements specified in EN 206. The frequency of inspection and testing activities for equipment is presented in EN 206, Table 23.

The entire plant, equipment and transport devices must be covered by a planned system of maintenance and must be maintained in an efficient working condition so that they do not negatively influence the quantity and quality of concrete.

Properties of designed concrete must be controlled as specified in EN 206, Table 24.

Properties of prescribed concrete, as well as its consistence and temperature, when specified, shall be controlled in accordance with EN 206, Table 24 (lines 2 to 6 and 9 to 14). This control must cover production, transport to the place of delivery, as well as the delivery.

Additional production control requirements may be necessary for certain types of concrete. Special knowledge and skill is required for the production of high strength concrete. These requirements are not defined in these General Technical Requirements or in EN 206. Only some general guidelines are given in Appendix H to the EN 206.

If special requirements for concrete are defined in the contract, the production control shall include such requirements, and they will have to be respected in addition to those given in EN 206, Tables 22 to 24.

9.3.1 EVALUATION AND DETERMINATION OF CONFORMITY

The producer is responsible for the conformity of concrete with specified properties. In this respect, the producer is required to perform the following actions:

a) initial testing, when required (cf. 7-00.1.6),
b) production control (cf. Section 7-00.1.6),
c) conformity control (cf. Section 7-00.1.5).

An authorized supervising or certification body is required to supervise, evaluate and certify conformity of produced concrete with quality requirements for concrete of designed or specified composition belonging to classes higher than C 16/20.

Requirements for evaluating conformity of precast concrete elements are contained in appropriate technical requirements (product-related standards and technical approvals).

Assessment, monitoring and certification of production control

For all concrete classes higher than C 16/20 the producer's production control shall be assessed and checked by an authorized inspection body and then certified by an authorized certification body.
An authorized inspection body shall first undertake an initial inspection of the concrete production plant in order to determine whether all preliminary actions enabling proper production and adequate production control have been met with respect to both personnel and equipment.

The inspection body is inter alia required to check:

- producer's production control manual and to evaluate its provisions, namely its conformity with production control requirements specified these General Technical Requirements.
- whether documents needed for the inspection of the plant are available and have been place at appropriate places, and whether persons employed at the plant have access to such documents,
- availability of all measures and equipment that are needed for the supervision and testing of equipment, components and plant,
- qualifications of the personnel for the production and production control,
- whether the initial testing has been performed in accordance with these General Technical Requirements and whether it has been properly documented.

If an indirect testing is performed or if the strength conformity criteria are based on results calculated for a concrete family, the producer is required to prove to the inspection body that there is a correlation or a reliable connection between the direct and indirect testing.

In order to confirm validity of production control results and to verify quality of concrete production and control system used, the inspection body is also required to undertake appropriate comparative tests. In the scope of this testing, the inspection body tests specific properties selected among those controlled by the producer, making use of the same standard procedures. The type and number of such tests, the method for their evaluation and for assessing conformity with production control results, is determined by the inspection body (until this issue is regulated by a competent national body responsible for specifying procedures for confirming conformity of construction products).

Such testing may be reduced to minimum or even omitted by the inspection body, which may proceed instead to a more extensive and detailed control of producer's data and production control system, provided that the producer's testing laboratory is certified and controlled by an authorized institution.

After the end of initial tests, the inspection body is required to write special reports about all significant facts relating to initial inspection, focusing on the equipment at the place of production, production control system and evaluation of the system. By this report, the inspection body determines whether the concrete production control has been performed in conformity with EN 206. This report is submitted to the producer and to the authorized certification body which will decide whether or not the production control is compliant with the requirements.

Once the production control has been found compliant in this initial period, the inspection body shall proceed to the routine supervision of the production control activities.

In general, the routine inspection performed by the inspection body consists in checking whether production preconditions are still being met and whether the production control is performed as specified.

The producer is responsible for the implementation of the production control system. When significant changes are made to the production system or in the production control manual, the producer is required to inform the inspection body about such changes, ant the latter may request that an initial inspection be performed once again.

In the course of the routine inspection, the inspection body is inter alia required to check:

- sequence of production, sampling and testing,
- recorded data,
- production control results obtained during the period of inspection,
- realization of required tests and sequence of activities, including respect of the frequency of testing,
- programmed maintenance of production equipment,
- programmed maintenance and calibration of testing equipment,
- measures taken in any event of non-conformity,
- delivery tickets and declarations of conformity, when required.

In order to ascertain itself of the validity of results and to gain trust in the sampling and testing performed during the producer's production control activities, the inspection body is required to take - even during the routine inspection - appropriate samples from the production and to test those samples. Even here, the scope of these comparative tests may be reduced to minimum, and the tests may in special cases be totally omitted if the inspection body has established by detailed inspection of the producer's data and production control system that the producer is well organized and that it properly implements the said system, provided that the producer's testing laboratory is certified and if its operation is controlled by an authorized institution. The intention to perform sampling for this testing must not be made known to the producer.

The frequency of these tests and the method according to which they are interpreted and compared with production control results shall be determined for every production unit by the inspection body, until this is specified by the national body responsible for specifying procedures for confirming conformity of construction products.

Concrete properties (such as strength and consistence) have to be tested in case of designed concrete.

Only consistence and composition have to be covered in case of prescribed concrete.

The inspection body is also required to periodically investigate and check correlations between results of direct and indirect tests, as well as the correlations between members of concrete families.

Routine inspection activities must be conducted at least four to six times a year, and their results and evaluations must be documented at least twice a year by establishment of an appropriate report that has to be submitted to the producer and the certification body.

The inspection body will have to perform an extraordinary inspection in cases when:

- significant deviations have been noted during routine inspection,
- production has been suspended for more than six months,
- this is requested by the producer (e.g. because of the change in production conditions),
- this is requested by the certification body (whose request must be backed by an appropriate explanation).

The form, type and period for such extraordinary inspection shall be defined separately for each particular situation.

The production control shall be certified by a national certification body (or by an institution authorized by such national body) based on the report submitted by the inspection body confirming that the production unit has been found compliant with requirements after preliminary testing of its production control.

Based on the report issued after continuous monitoring of production control, the certification body or the institution authorized by such body, will decide every year whether or not it should extend validity of certificates issued during the previous year.

When the inspection body identifies a case of non-conformity with requirements, or when errors which have not been promptly removed by the producer are identified in the production process or in the production control process, the certification body shall ask the producer to remove such errors in an appropriately brief period of time. Measures taken by the producer for such removal of errors, shall be checked by the inspection body.

Extraordinary supervision activities and additional tests are most often conducted if non-conformity is related to:

- strength,
- water/cement ratio,
- major limitations of the composition,
- density in case of designed light-weight and heavy-weight concrete,
- specified composition in case of prescribed concrete.

If results obtained during extraordinary inspection activities are not satisfactory, or if additional tests are not compliant with specified criteria, the certification body will have to promptly suspend or withdraw the conformity certificate. After that, the manufacturer will no longer be allowed to refer to such certificate.

9.3.2 MARKING OF DESIGNED CONCRETE

When significant properties of concrete have to be presented in form of abbreviations, then such properties will be marked as follows:

- by referring to EN 206,
- compressive strength: the class of compressive strength will be specified, e.g. C 25/30,
- limit values according to the class of exposure: class designation
- maximum chloride content: the class is determined, e.g. Cl 0,20,

- maximum nominal size of aggregate grains: value D_{max}, e.g. D_{max} 22,
- density: according to class designations given in, e.g. D1,8,
- consistence: according to class designations given in a specified value and procedure.

9.4 REQUIREMENTS FOR REALIZATION OF CONCRETE WORKS

9.4.1 DOCUMENTATION

The following documentation is necessary for concrete works:

- all technical information specified in the design (project specifications),
- procedres for the change of project specifications,
- requests for the distribution of documents,
- quality plans, if required,
- working documentation, if required.

Project specifications

Technical documentation consists of the design analysis of the structure and individual elements, and of project specifications.

Project specifications contain:

- structural drawings providing all necessary information, such as geometry of the structure, quantity and position of reinforcement, prestressing steel, precast concrete elements, precast units, spacers, etc.
- description of all products that will be used with all conditions of use, as given n drawings and/or description of work,
- description of works as a document describing inspection class to be applied, all inspection tolerances, surface finish requirements, etc.
- description of works including all requirements for the realization of works, i.e. sequence of activities, temporary support work, working procedures, etc.
- specifications for the assembly of precast concrete elements, Specifications for the assembly of precast concrete elements contain:
- assembly drawings consisting of plans and as-built positions and connections of elements,
- assembly data with properties of materials built into the structure, including inspection data,
- assembly instructions with all data that are necessary for the handling, storing, erecting, fastening, attaching and finishing the work.

Project specifications are deemed to contain all information and technical requirements that are needed for the realization of work, including authorizations and approvals given during such realization, as well as all relevant standards and technical approvals. Prior to the commencement of realization of any portion of the job, project specifications for such portion of the job must be finished and readily available.

Working documentation

Quality Program

It should be specified in the design that a quality control program (concrete design) must be prepared and that this program must be kept on the site at place where it will be readily available.

Special Documentation

If any other special documentation is required, the type and level of detail of such documentation shall be specified in the structure's design.

If the inspection of the second and third class is needed, then the inspection documentation will also be required.

Formwork and scaffolding

Basic requirements:
Scaffolds and formworks, including their supports and foundations, must be designed and built in such a way that they are:

- resistant to every action to which they are exposed during realization,
- sufficiently strong to meet tolerances specified for the structure, and to prevent any structural damage.

The form, functioning, appearance and durability of permanent work must not be jeopardized or harmed either by properties of scaffolds and formworks or by their removal.

Scaffolds and formworks must be compliant with relevant Albanian and European standards such as EN 1065.

9.4.2 MATERIALS

General

Any material capable of meeting structural requirements specified in these General Technical Requirements may be used. Materials must be compliant with appropriate product-related standards, if available. Properties of special materials must be taken into account.

Formwork oils

Formwork oils must be selected and used in such a way that they are not harmful to concrete, reinforcement or formwork, and that they are not detrimental to natural environment.

Unless otherwise specified, formwork oils must not negatively influence the concrete surface, its color or special surface coatings, if used.
Formwork oils must be used in accordance with instructions provided by the producer or supplier.

Scaffolds

The method used for erection and removal of temporary structures must be described in an appropriate procedure, if required. In such a case, requirements related to handling, fastening, loading, erection and removal must be specified.

The scaffold design must take into account deformations that will occur during and after concreting, in

order to avoid appearance of harmful cracks in green concrete. This can be obtained by:

- limiting deflection and/or slump,
- controlling concrete placing and/or by specifying concrete e.g. by slowing down the placing process.

Formworks

The formwork must give a proper shape to the concrete until it hardens.

The formwork and ties between elements must be sufficiently impermeable to prevent leakage of fine mortar.

The formwork that either absorbs a significant quantity of water from concrete or enables evaporation should be wetted in an appropriate manner to prevent loss of water from concrete, except when such formwork is used intentionally and in a controlled manner.

The internal surface of formwork must be clean. If the formwork is used for an architectural concrete, its treatment must correspond to the expected appearance of such concrete.

9.4.3 SPECIAL FORMWORKS

Sliding

When a structure is realized using a sliding formwork, the formwork material must be taken into account in the concrete design, and the geometry of work must adequately be defined.

Appropriate guides or spacers must be used to provide for an appropriate thickness of protective layer of concrete, in accordance with tolerances given in these GTR.

Other special types of formwork

Requirements for other special types of formwork must be defined in project specifications.

Surface finish

Any special treatment of concrete surface shall be defined in project specifications. Test concrete panels may be required as a method of checking quality of the surface treatment of concrete.

The type and quality of surface treatment will depend on the type of formwork, concrete (aggregate, cement, chemical and mineral admixtures), placing method and cure during placing.

9.4.4 FORMWORK INSERTS AND EMBEDDED COMPONENTS

General

Temporary formwork supports, bars, pipes and similar objects that will be concreted into the structure, as well as built-in elements such as plates, anchors and spacers must:

- be firmly fixed so that the design position is preserved during the concreting,
- not influence the structure in an unacceptable manner,

- not cause a harmful reaction with concrete, reinforcement or prestressed steel,
- not cause an unacceptable appearance of concrete surface,
- not have a detrimental effect on the functionality and durability of the structural element.

The strength and rigidity of every placed element must be such that it can retain its form in the course of concrete placing activities. It must not contain any substance that is likely to be detrimental to the element itself, to the concrete or to the reinforcing steel.

Temporary inserts

Any depressions or openings for temporary works must properly be filled and, after filling, the surface shall be treated using material of quality similar to the surrounding concrete, except when they are to remain open or when an another type of treatment is planned.

Release and removal of formwork

The scaffold and the formwork must not be removed until the concrete has gained the strength sufficient to:

- withstand any surface damage due to form removal,
- take on all forces influencing the concrete element at that moment,
- avoid deformation in excess of tolerances specified for elastic or non-elastic behavior of concrete.

Formwork shall be removed in such a way to prevent any overload or damage to the structure.

The scaffold load shall be released gradually so as not to impose additional load on other elements of the scaffold. The stability of the scaffold and formwork shall be maintained throughout the release and removal operations.

When a special releasing or supporting procedure is used as a means to reduce initial load, it is also necessary to take into account any subsequent load and/or excessive deformation.

If the formwork is a part of concrete curing system, provisions contained in Section 7-00.2.5 should be taken into account with respect to formwork removal.

9.5 CONCRETE REINFORCING STEEL

This work consists of furnishing and placing reinforcing steel. The reinforcing steel used to carry out the reinforcement of structures in this project is type B500C with specifications according to EN 1992-1-1. Full details for each steel are given in the respective codes cited above.

Provisions contained in these requirements are related to reinforcing steel for concrete, i.e. reinforcing steel bent on the site and reinforcing steel produced in a steel-working plant.

9.5.1 MATERIALS

The reinforcing steel for concrete shall comply with requirements contained in EN 10080 and with

requirements specified in the design documentation for a particular structure. Every product must be clearly marked and recognizable.
Anchoring and tying elements must comply with requirements contained in ENV 199-1-1 and with those contained in the design.

The surface of the reinforcing steel must be cleaned of rust and other substances that might have a harmful effect on the steel, concrete, or on the bond between them.

Galvanized reinforcement may be used only in concrete with cement that will not have a harmful effect on galvanized reinforcement.

Splicing, except as shown on the plans, is not permitted without approval. Provide lap lengths shown on the plans. Splice reinforcing bars only where shown on the plans or accepted drawings.

Make lapped splices by placing the reinforcing bars in contact and wiring them together so as to maintain the alignment and position of the bars.

If welding of reinforcing steel is permitted, use welders with current certifications and make the welds conform to AWS *Structural Welding Code - Reinforcing Steel, D 1.4*. Do not weld reinforcing steel if the chemical composition of the steel exceeds the percentages in table below:

Chemical Composition	**Percent**
Carbon (C)	0.30
Manganese (MA)	1.50
Carbon Equivalent (C.E.)	0.55

Table 92 - Reinforcing steel components

Mechanical couplers may be used instead of welding if approved. Use couplers with a strength that is at least 125 percent of the required yield strength of the reinforcing steel. Do not exceed 0.25 mm total slip of the reinforcing bar within the splice sleeve when loading in tension to 207 Mpa and relaxing to 20 MPa for bar sizes up to No. 43 as measured between gage points clear of the splice sleeve.

If welded wire fabric is shipped in rolls, straighten into flat sheets before placing. Splice sheets of mesh or bar mat reinforcement by overlapping not less than 1-mesh width plus 50 mm. Securely fasten at the ends and edges.

9.5.2 BENDING, CUTTING, TRANSPORTING AND STORING

The reinforcing steel for concrete shall be cut and bent in accordance with project specifications. At that:

- bending must be performed at an uniform rate,
- appropriate protection measures must be taken when steel bending is performed at temperatures below -5°C (if project specifications allow steel bending at such low temperatures),

- steel bending by heating is allowed only if project specifications expressly permit such bending method.

Diameter of the steel bending mandrel must be adjusted to the actual type of reinforcement and shall not be smaller than the values presented in Table below.

Reinforcing steel	hooks, overlaps, loops		bent bars		
	Bar diameter		smallest protective coating of concrete, perpendicular to the plane of the curve		
	<20 mm	≥20 mm	>100 mm and >7 Ø	>50 mm and >3 Ø	≤ 50 mm and >3 Ø
Round bars S 220	2,5 Ø	5 Ø	10 Ø	10 Ø	15 Ø
Rebars	4 Ø	7 Ø	10 Ø	15 Ø	20 Ø

Table 93 - Smallest diameter of the steel bending mandrel

For welded reinforcement and welded wire fabric, the mandrel diameter must correspond to the type of reinforcement, and must not be smaller than the values given in Table below.

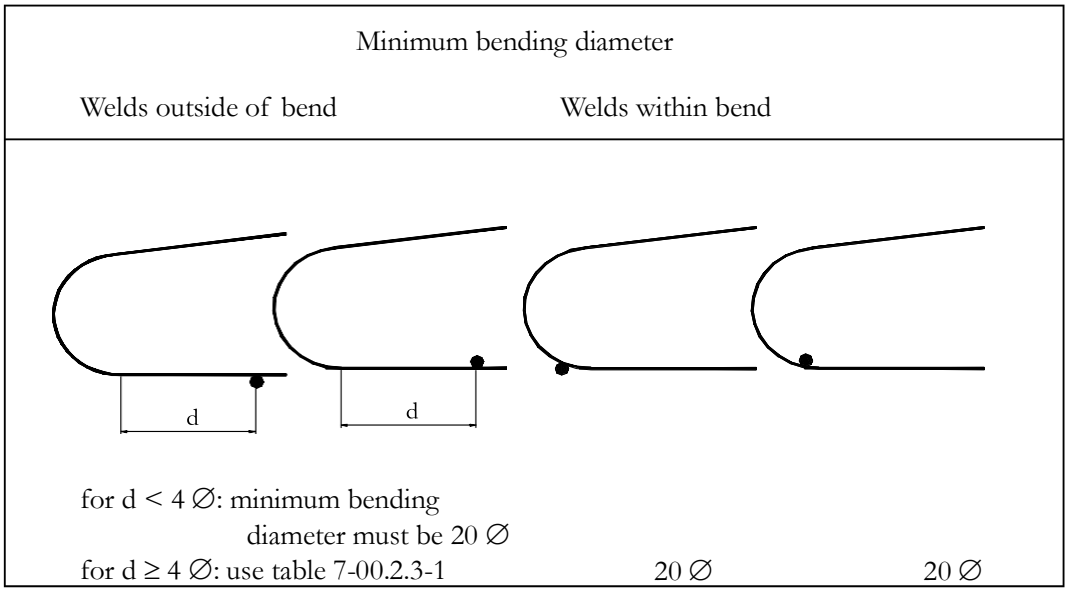

Figure 2 - Smallest mandrel diameter for welded bars and steel fabric

Reinforcing bars, wire fabric and prefabricated reinforcement cages must not be damaged in the course of transport, storage, handling and placing into position specified in the design.

Bent bars may be straightened only if:

- special equipment for local stress reduction is used,
- straightening procedure has been authorized in the project specifications.

Reinforcing bars in rolls can be used only if an appropriate straightening equipment is available and if such procedure has been approved.

The following requirements must be met with respect to the cold bending of steel reinforcement:

- it must be specified in project specifications whether repeated bending at the same point is allowed,
- Substances for the protection of reinforcement to be used for subsequent connection should be designed and selected in such a way that they do not have a harmful effect on the bearing capacity of the concrete structure and on the anticorrosive protection of the reinforcement.

9.5.3 WELDING

Welding must be conducted in accordance with project specifications. Allowable welding procedures include:

- arc welding,
- gas welding,
- flame welding,
- spot welding.

Reinforcing steel welding is permitted only if reinforcing steel conforming with EN 10080 is used and in case of reinforcing steel that is declared as weldable.

Welding at structurally significant and delicate points must be performed by qualified welders with an appropriate training certificate. The welding must not be performed at the bar bent or near the bent zone.

Spot welding process may be applied for making reinforcement connections, but only if not specified otherwise in project specifications.

Joints

Bars shall be connected either by overlapping, coupling or welding in accordance with EN 1992-1-1 or according to project specifications.

The tensile strength and ductility (resistance to bending) of butt-welded connections for principal tensile reinforcement must be periodically checked and this checking should be included in the program for the inspection of work.

Assembly and placing

The reinforcement must be placed in positions as specified in the design. A special care must be taken with respect to reinforcement and protective layer of concrete at points where small openings not specified in the design are situated.

It is assumed that project specifications provide appropriate information about placing and distribution of reinforcing bars, and about measures to be taken in zones where reinforcing bars are densely packed.

The reinforcement must be fastened and its position must be protected in accordance with tolerances specified in these General Technical Requirements. The reinforcement can be tied with a thin wire or by spot welding as specified in these General Technical Requirements.

The protective layer of concrete must be protected with appropriate supports or inserts. Steel supports in contact with the surface are allowed only in dry environment, i.e. in the exposure class X0 as specified in EN 206.

The requirement for the protective concrete cover shall be taken as a nominal value C_m, and shall be calculated until the surface of any reinforcement, including the ties.

9.6 PRESTRESSING STEEL - STRAND

The following concrete prestressing procedures are used:

- bonded pre-tensioned construction,
- bonded post-tensioned construction,
- unbonded post-tensioned, internal or external construction.

Special emphasis must be placed on the observance of safety measures.

Prestressed concrete structures must be realized using materials whose compliance with requirements has been proven.

9.6.1 PROTECTIVE PIPES (SHEATHS)

Protective steel pipes for prestressed cables must be compliant with EN 523.
Cable protection made of material other than steel can be applied only if an appropriate technical approval authorizing its use has been provided. The same provision applies to the protection of unbonded prestressed wires.

Prestressed steel or replacement materials

Anchors and prestressed steel (wires, cables and bars) must be compliant with requirements of EN 1992-1-1 or EN 10138. The material used for unbonded tendos (internal or external) must comply with requirements of the EN 1992-5.

An appropriate national-level technical approval for use must be obtained for the use of non-steel materials i.e. carbon, glass or aramide fibers, in prestressing.

Prestressing steel, anchoring elements, tying elements and cables fabricated on the site, shall be transported in clean vehicles, not containing any chemical substances that may harm the steel. Any contact with harmful substances must be avoided by providing for special packaging in the factory or by supporting steel in such a way to prevent any contact with the surface of the vehicle. The transport by water may be permitted only if an appropriate packaging is used.

The diameter of bars to be transported and stored in rolls shall be subject to approval. Prestressed steel must be stored in such a way to prevent any contact with soil or any exposure to rain. The prestressing steel shall preferably be stored in closed storage areas where relative moisture is kept below 60 percent.

Cables fabricated on site and placed n pipes shall be protected at their ends against penetration of moisture, namely condensation, and shall be supported at intervals that will not be harmful to the stability or impermeability of pipes.

Anchoring elements and accessories

Only duly specified or approved anchoring elements and accessories shall be used.

Tendon supports

Tendon supports:

- must not exert any negative influence on steel or concrete,
- must be strong enough to ensure that cable is properly fixed in the specified position,
- must not damage the protection.

Tendon supports must be spaced in such a way to ensure conformity with required lines and levels.

Cement grout

The cement grout for cables must be compliant with the standard EN 447.

Grease, wax and other products

Grease, wax and other similar products used as fill for cable pipes and anchors must comply with requirements contained in EN 1992-1-5.

Documentation

Project specifications and working documentation relating to prestressing activities, identification documents and documentation relating to the approval of materials and/or cables, must be readily available on the site.

Materials delivered to the site must be furnished with a dispatch document. Materials delivered without an appropriate dispatch document shall be rejected.

Dispatch documents, test results and non-conformity findings, must be included in the test report.

Transport and storage

Materials sensitive to corrosion such as prestressed steel, protective pipes, anchoring elements, connection elements, prestressed cables and cables produced on the site, must be protected against harmful influences during their transport and storage, and after placing in the period until permanent protection is placed. Materials greatly affected by corrosion must be replaced with appropriate replacement materials.

The cement and dry mineral and chemical admixtures for the grout must be protected against water and moisture during their transport and storage.

Fabrication of tendons

The prestressing tendons must be equipped in accordance with appropriate technical approvals applicable for the prestressing system used.

The type and class of prestressed steel must be specified in the Supervising Engineer's report.

Welding prestressed steel or anchors, and autogenous cutting by oxygen or wielding in the vicinity of prestressed steel, shall not be permitted. It shall also not be permitted to weld electric spirals for the distribution of pressure, nor to weld anchoring plates, or to proceed to spot welding of perforated plates, unless otherwise defined in project specifications.

Protective pipes and their connections must be watertight.

Other types of protection and their connections must comply with requirements similar to those applied for protective pipes.

Pipe sealing compounds must not contain chlorides. Prestressed steel may be cut by disc-cutters.

Installation of tendons

General

The prestressing tendons must be placed and protected in such a way that they are fixed in their final position, within acceptable tolerances.

The entry of tendons into anchors and connections must be straight.

Pre-tensioned tendons

Unattached parts of prestressed steel (i.e. parts situated outside of concrete) must be properly protected against corrosion.

Post-tensioned tendons

Openings of protective pipes must be protected at both ends and at points where penetration of air or water could be expected.

Openings must be properly marked to enable identification of cables.

Protective pipes must be protected against damage by placing and compacting an appropriate type of concrete.

The resistance of protective pipes to deformations may be increased by using an adequately hard steel sheet or by temporary supports made of polyethylene or similar pipes.

Internal and external unbonded tendons

Unbonded tendons for internal and external prestressing must properly be protected against moisture.

Application of force

The tensioning must be conducted in accordance with the previously defined and approved program. The force and elongation data must be specified in the Supervising Engineer's report.

Written instructions relating to the application of force must be readily available on the site.

Force application elements must be selected among those that are compliant with the prestressing

system used on the project.

Valid calibration reports for the force measuring elements must be available on the site prior to the start of prestressing.

The application and/or transfer of prestressing action on the structure must be gradual and shall be allowed only when the concrete strength has been determined as compliant with requirements of the EN 1992-1-1 and when it is equal to or lower than the minimum compressive strength required according to the prestressing system applied on the project.

The concrete strength is highly significant for the anchoring procedure. Appropriate measures, as defined in project specifications, must be taken if during application of force to the post-tensioned cables the design elongation is not within ± 5 percent of the total specified force or within ± 10 percent of force specified for one cable. The same action must also be taken if the design elongation during application of force to pre-tensioned cables is not within ± 3 percent of the total force specified or within ± 5 percent of the force specified for one cable.

Results obtained during implementation of the prestressing program, and conformity or non-compliance of the program with requirements, must be specified in the Supervising Engineer's report.

As the application of force is a complex procedure during which considerable forces are applied on anchors and prestressed cables, appropriate safety measures must be taken and the process must be controlled by experienced personnel.

9.6.2 PRE-TENSIONED TENDONS

Appropriate temporary protection measures must be taken if the concrete can not be placed within the specified period of time following application of force. Such temporary measures must not be harmful to the adhesion and must not negatively influence the concrete and/or the steel.

In addition to requirements specified , the following must also be defined in the force application program:

- every individual prestressing section,
- pressure on the jack and equivalent force,
- minimum and maximum allowable stress in the cable and the effect of such stress on the anchoring zone,
- required strength of concrete during relaxation of the prestressing force.

Practical suitability of already used anchoring elements must by proven by an appropriate verification.

9.6.3 POST-TENSIONED TENDONS

The force must not be applied at ambient temperatures of less than -10°C, unless otherwise specified in the design.
The force must not be applied to concrete at temperatures of less then +5°C, except in cases when a procedure compliant with special design requirements is given in the design.

In case deviations from planned behavior are registered during application of force, the relaxation of force or cable grouting shall not be allowed. In such a case, no work must be performed that is likely to negatively affect a repeated stressing. All such work must be postponed until approval of a revised

stressing report.

In addition to requirements given, the following must be specified in the force application program:

- prestressing system used,
- type and grade of prestressed steel,
- number of bars, wires and strands in each cable,
- required strength of prestressed concrete,
- cable tensioning sequence,
- design stress and force, and cable elongation,
- relaxation at anchoring point,
- every partial or full release of scaffold.

The following information must be contained in the report:

- verification of concrete strength required for application of force,
- type of equipment used for the application of force,
- force measured at the jack and elongation of cable at every tensioning increment,
- observed relaxation of anchor,
- every significant deviation from design force and design elongation values,
- release of scaffold, if specified.

Internal and external unbonded tendons

The above specified requirements are also applicable to internal or external stressing of unbonded tendons.

9.6.4 PROTECTION MEASURES (GROUTING, OILING AND CONCRETING)

Written instructions must be provided for the preparation and implementation of protection measures. The grouting equipment must comply with requirements contained in EN 446 and must be selected based on the prestressing system approved on the project.

Inspection results and evidence of conformity with protection requirements must be provided in the inspection report. Anchorage head, anchorage zone and cables must be protected against corrosion.

Pre-tensioned cables

Cable ends must be protected against corrosion.

Post-tensioned bonded tendons

Grouting of post-tensioned bonded tendons must be compliant with requirements specified in EN 446 and EN 447.

Unless otherwise specified in the design, the following realization periods are recommended If the penetration of water or excessive moisture can be prevented:

- no more than 12 weeks between cable realization and grouting,
- no more than 4 weeks in formwork prior to concreting,
- about 2 weeks in prestressed state prior to protection.

If the above period between the tensioning and grouting is exceeded, then the temporary protection must be provided in an approved manner. An appropriate protection may consist in cable ventilation with dried air or nitrogen in appropriate intervals of time.

9.6.5 EXTERNAL OR INTERNAL UNBONDED TENDOS

The grout for the grouting of external cables must be compliant with requirements these General Technical Requirements.

In other cases, protective pipes and anchorage heads for cables must be filled, using a specified procedure, with a non-corrosive oil or wax compliant with requirements contained in EN 1992-1-5.

Grouting

The mixing process (proportioning, water/cement ratio, procedure, time) must result in properties complying with EN 446 and EN 447 or with specifications given in the design.

The grouting must be compliant with requirements specified in EN 446 or with those specified in the design.

Properties specified for the grout must be confirmed by testing, and the type and number of such tests shall be specified in the quality control program relating to the realization of works.

When subsequent grouting, large diameter pipes, vertical pipes or inclined pipes are required, their properties must be compliant with requirements given in EN 446.

The grouted volume must be comparable to the theoretical free volume of pipes. Every void in pipes must be either vacuumed or re-grouted.

In case of vacuuming, the free volume in pipes must be measured. The quantity of grouted mix must be comparable with such volume.

9.6.6 GREASING OPERATIONS

The greasing must be performed at an uniform rate, without interruptions.

The volume must be comparable with the theoretical free volume of pipes. At that, the change in oil volume with temperature must be taken into account.

After the end of oiling, any unwanted loss of oil from pipes must be prevented by sealing the pipes under pressure.

9.7 STAY CABLE STRANDS

Stay Cable Strands for the Cable Stay Bridge must meet the requirements of EN 10138-3 and their technical specification are shown below. Stay Cable Strands must be HDPE sheathed.

Y 1860 S7 15.7

Specifications (according to EN 10138-3)

Diameter (mm)	15.7
Tensile strength (MPa)	1860
Cross sectional area (mm²)	150
Mass per meter (g/m)	1172
Characteristic value of maximum force (kN - min)	279
Maximum value of maximum force (kN)	321
Characteristic value of 0.1% (kN - min)	246
Modulus of elasticity (kN/mm²)	195
Minimum total elongation (%)	3.5

Main application

- Beams

7 wires

Agreements

- ASQPE (France), BENOR (Belgium), DIBt (Germany), ITB-IBDIM (Poland)
- Italian, Russian and Spanish approval

Packaging: coil

Inside diameter	Width	Indicative weight
800 or 950 mm	700 or 750 mm	2500 to 4000 kg

Some references

- KP1, Rector Lesage, SEAC, CRH, Consolis

Also available

- T9.3, T12.5, T15.2, T 15.5
- 7 wires strands unbonded (T15.2, T15.7)

The strands are protected by three layers of corrosion protective coatings;

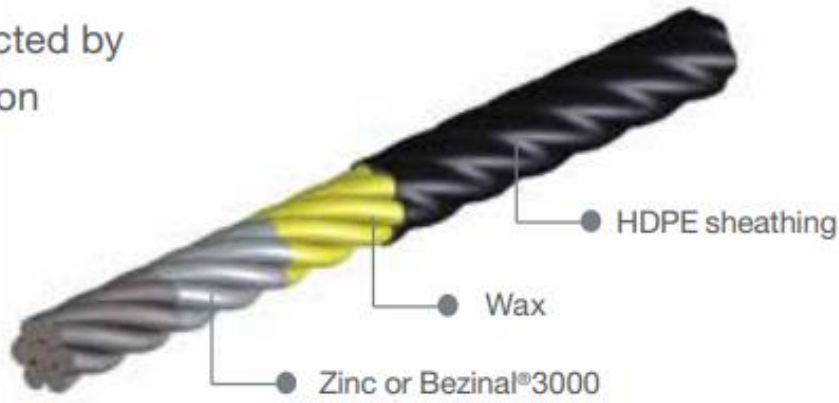

Stay Cable Strands Specifications:

Nominal diameter	15,20 or 15,70 mm
HDPE wall thickness	1,5 mm (+0,5)
Body mass (inclusive HDPE coating)	1,20/1,30 kg/m
Nominal section	140 / 150 mm²
Tensile strength	1860 Mpa
Breaking load	260 / 279 kN
Elongation at break	≥ 4.5%
Max. relaxation at 1000 hours, 20°C	< 2,5% (initial tension 0,7 Fma)
Elastic modulus	195 GPa + 5%
Coating	Bezinal® 3000 or galvanized redrawn acc.to NFA35-035 190-350 g/m²
Fatigue resistance	meets NF A35-035 and ISO15630-3 > 2 000 000 cycles

9.8 CONCRETING

Quality requirements for concrete

The concrete must be specified and fabricated in accordance with the standard EN 206 and as specified in these General Technical Requirements.

It should be determined, prior to the start of concreting, whether all requirements relating to realization of concrete works have been properly specified.

Delivery, handover and site transport of fresh concrete

The quality of concrete shall be supervised and controlled at the point of concrete placing, and the scope of such inspection and control shall be at least compliant with requirements specified in these General Technical Requirements.

Before concrete unloading, the dispatch document should be checked and initialed if found compliant with requirements. The concrete shall be checked visually during concrete unloading and, if its appearance is unusual (different color or consistence), the unloading process will have to be stopped.

Harmful changes of fresh concrete such as segregation, concrete bleeding, loss of fine mortar, etc., must be prevented or reduced to minimum during loading, transport, unloading and site transport. When specified in these General Technical Requirements, samples for identification testing will have to be taken at the concrete placing location or, in case of ready-mixed concrete, at the place of delivery.

Pre-concreting operations

Plans for concreting and inspection shall be made, and other measures provided for in these General Technical Requirements shall be taken, for the second or third class realization that is subject to inspection.

When necessary, the initial testing of concreting process shall be made on a test section. The process will have to be properly documented prior to concrete placing.

Before the concreting starts, all preliminary activities must be completed, checked and documented as required for the specified class of inspection.

Structural joints must be clean and wetted.

The formwork must be cleaned from any accumulation of dirt, ice, snow or water.

If the concrete is placed directly onto the rocky soil, the fresh concrete will have to be protected so as to avoid mixing with soil and water loss.

Structural elements must be separated from foundation soil by concrete bedding at least 5 cm in thickness, or the thickness of the protective bottom layer of concrete should be increased correspondingly.

The temperature of the foundation soil, rock, formwork, or structural elements that are in contact with surface to be concreted, must be such that it does not cause freezing of concrete before the concrete has attained a sufficient resistance to freezing. The concrete must not be placed onto frozen soil, unless special measures have been approved for such cases.

Measures for the protection of concrete against freezing must be planned if ambient temperatures of less than 0°C may reasonably be expected to occur at the time of concrete placing, or during the concrete curing period.

The surface temperature of concrete at structural joint must be above 0° C prior to concreting of the next layer. Appropriate measures for concrete protection must be planned If high ambient temperatures are expected during concrete placing or in the period of cure.

Ambient temperatures at which appropriate measures for the protection of concrete against damage must be taken, shall be specified in the design.

Placing and compaction

The concrete shall be placed and compacted in such a way that all reinforcement and embedded elements are fully covered with concrete, and that an appropriate protective layer of concrete is provided in accordance with specified tolerances, and also in such a way to ensure that required strength and durability of concrete has been obtained. Special attention must be paid to the placing and compaction of concrete in zones of change in cross section, in zones of reduced cross section, next to openings, at points where reinforcement is densely packed, and at concrete work interruption points.

Unless otherwise specified in the design, the concrete must be vibrated by means of submerged vibrators. The concrete must be placed as close as possible to its final position in the structural element. The vibrating must not be used as a means of pushing concrete through the formwork and reinforcement.

The normal layer thickness must not exceed the height of the submerged vibrator. The vibrating must be performed by systematic vertical immersion of vibrator so that the surface of the preceding layer is re-vibrated. In case of thicker layers, surface layer re-vibration is also recommended as a means to avoid plastic settlement of concrete to the level below top reinforcing bars.

The vibration with surface vibrators must be carried out until the entrapped air has been released from the concrete. Excessive surface vibration, which reduces quality of the surface layer of concrete, must be avoided. In case only surface vibration is applied, the layer thickness after vibration does not normally exceed 100 mm, unless experimental evidence to the contrary has been furnished. Additional vibration of surfaces next to supports is quite helpful.

The rate of concrete placing and compaction must be sufficiently high to avoid cold joints and sufficiently low to avoid excessive settlement or overloading of the formwork and scaffold. Cold joint can form during concrete placing if the concrete of the placed layer has set before the next layer has been placed and compacted. Additional requirements relating to the procedure an rate of concrete placing may be required in cases when a special surface treatment is specified.

The concrete segregation during placing and compaction must be reduced to minimum.

The concrete must be protected during placing and compaction against insolation, strong wind, freezing, water, rain and snow.

The light-weight aggregate concrete must not be pumped, unless it has been demonstrated that the pumping will not significantly affect the strength of hardened concrete.

Subsequent addition of water, cement, surface hardeners or similar materials will not be allowed, unless otherwise is expressly specified in the design.

Cure and protection

In the early period the concrete shall be protected so that:

- shrinkage is reduced to minimum,
- necessary surface strength is achieved,
- sufficient durability of surface layer is ensured,
- it is not affected by freezing,
- It is not subjected to harmful vibrations, impacts or any other damage.

Project specifications may contain additional requirements for:

- the highest temperature difference per cross section of concreted element,
- the highest temperature difference between the concreted element and the previous one,
- aggregate temperature,
- monitoring in the course of construction.

The following curing procedures, applied either separately or successively, are considered appropriate:

- keeping concrete in formwork,
- covering concrete surface with vapor-tight foils, especially fixed and protected at joints and ends.
- covering with moist materials and protecting them against drying,
- keeping concrete surface visibly moist by appropriate wetting,
- applying appropriate protective coatings (the properties of which are confirmed by certificate or technical approval).

When using a high strength concrete, a special attention must be paid to the protection of concrete against cracking resulting from plastic shrinkage.

Curing procedure must ensure low evaporation of moisture from the surface layer of concrete or keep the surface in a permanently moist condition. Natural curing is considered sufficient if conditions during the overall curing period are such that the rate of evaporation of moisture from concrete is kept sufficiently low, e.g. in humid, rainy or foggy weather.

The curing of concrete surface must commence immediately after compaction and surface treatment. If the exposed concrete surface is to be protected against cracking due to plastic shrinkage, the temporary curing procedure must be applied even before the surface treatment.

The curing time must be related to the development of concrete properties in the surface layer, i.e. to the ratio of:

- strength to concrete maturity,
- released heat to the total heat released under adiabatic conditions.

For the concrete that will be exposed to aggressiveness class X0 or XC1, the minimum curing time must be 12 hours, provided that the setting takes place within 5 hours and that the temperature at the concrete surface is at least equal to or higher that 5°C.

Unless otherwise (more strictly) specified in the design, the concrete to be used in an aggressiveness class not including X0 or XC1 shall be cured until the surface layer of concrete has attained at least 50 percent of the compressive strength specified. This requirement may be checked according to experience- based data.
If the heat development is used for measuring development of concrete properties, then the ratio of heat to the corresponding strength must previously be determined or approved by an authorized institution.

Development of concrete properties may be determined more accurately using any one of the following procedures:

- calculation of maturity based on temperature measurements at the depth of no more than 10 mm under the concrete surface,
- calculation of maturity based on mean daily air temperature measurements,
- heating temperature,
- other appropriate procedures.

The calculation of maturity must be based on an appropriate maturity function, proven for a particular type of cement or for a combination of cement and mineral admixture.

Temperature at concrete surface, °C	Minimum curing time, days[1),2)]			
	Concrete strength development[4)] (fcm2/fcm/28) = r			
	fast, r ≥ 0.50	medium, r = 0.30	slow, r = 0,15	very slow
r < 0.15				
T ≥ 25	1.0	1.5	2.0	3.0
25 > T ≥ 15	1.0	2.0	3.0	5
15 > T ≥ 10	2.0	4.0	7	10
10 > T ≥ 5[3)]	3.0	6	10	15

[1] by adding every setting time in excess of 5 hours
[2] linear interpolation between values in rows is allowed
[3] for temperatures of less than 5°C, the time must be extended for the period equal to the time below 5°C
[4] concrete strength development corresponds to the ratio of medium compressive strength of concrete after 2 days to medium compressive strength of concrete after 28 days

Figure 3 - Minimum curing times for concrete belonging to exposure classes other than X0 and XC1

An appropriate higher curing time must be specified in the design for concrete surfaces exposed to abrasion or other harsh conditions, so that the specified (higher) strength ratio can be obtained.

Protective coatings must not be used on structural joints, on surfaces subject to subsequent treatment, or on surfaces where connection with other materials must be ensured, unless such coats are fully removed prior to subsequent operation or if it is proven that they will not be harmful to such subsequent operation.

Unless expressly specified in the design, protective coats shall not be used even on surfaces for which special surface appearance is specified.

Protective coats may penetrate into the concrete and may be very difficult to remove. In such cases they should be removed either by sanding or by spraying them with water under pressure.

The surface temperature of concrete must not fall below 0° C in the period until the surface of concrete has attained the strength sufficient to ensure its resistance to freezing (usually above 5 N/mm^2). The highest temperature of concrete must not be greater than 65° C.

Negative influences of high concrete temperature during curing time may be:

- significant reduction in strength,
- significant increase in porosity,
- delayed formation of ettringite,
- higher temperature difference between the concreted element and the preceding element.

Post-concreting operations

After removal of formwork, the Supervising Engineer shall check the concrete surface in accordance with specified class of inspection, and shall determine its conformity with requirements.

During realization of such activities, the concrete surface shall be protected against damage and disturbance of surface texture.

In accordance with requirements given in these General Technical Requirements and other requirements for the realization and use of the concrete structure, the testing requirements for placed concrete (properties, frequency and conformity criteria) shall be defined in the design of the structure and in the plan for ensuring quality control during realization of the structure.

Special procedures during realization of works

Special realization procedures shall be specified by providing a separate description of the procedure, and all changes shall be harmonized with design requirements.

The use of special concrete types such as the light-aggregate concrete, high strength concrete, heavy-weight concrete, and underwater concrete, must also be specified in the design.The concrete for slipforming must have an appropriate setting time. The sliding must be conducted using an appropriate equipment and procedure, making sure that reinforcement cover is appropriate, and that the concrete quality and surface treatment are satisfactory. The sliding must be controlled by an expert properly experience in this type of realization.

The use of sliding form for reinforced-concrete structures must be avoided in cases when concrete will

be subject to the influence of aggressive environment classified as XS3.

9.8.1 CONCRETING OF COMPOSITE STRUCTURES

The concrete work for composite structures shall be realized in accordance with these General Technical Requirements. All additional requirements shall be specified in the design.

Construction with precast concrete elements and site manufactured components

These General Technical Requirements define procedures for the realization of structural elements, namely structural elements produced on the site as well as precast structural elements, from their reception on the site to their final placing and approval.

The use of site-mixed or precast concrete elements shall be regulated by an approved design in which their use will be coordinated with the behavior of the overall structure.

Factory produced precast elements

Unless regulated by a specific standard, ready mixed (precast) concrete elements shall be regulated by an appropriate Albanian standard or technical approval until their reception on the site.

Site manufactured elements

Components produced on the site may be treated as precast elements if they are compliant with an appropriate EN standard.

Elements produced on the site that do not comply with any Albanian standard can not be accepted as precast elements. Their production shall be regulated by these General Technical Requirements.

The sequence of operations following after production of site-produced elements is the same as that used for ready mixed (precast) elements.

Handling and storage

The handling, storage and protection of precast elements must be conducted in accordance with the design.

Handling

The lifting diagram providing suspension points and forces, description of the lifting system and, when necessary, special requirements, must be readily available on the site. The total weight and tolerances must be provided for every element.

Storage

Storage instructions must contain storage positions and allowable points of support, information on maximum storage height, protective (safety) measures, and other requirements relating to stability.

9.8.2 PLACING AND ADJUSTMENT

Requirements relating to the placing and positioning of precast elements must be given in appropriate technical specifications. On-site handling and storing specifications must be readily available on the site

prior to each delivery of precast elements.

The work program with all phases of required on-site operations must be readily available on the site.

The work must not commence before conformity with the above requirements is confirmed.

Placing

The distribution of supports, strutting requirements, and temporary stability measures, shall be defined in technical specifications. When necessary, the axis and position for guiding elements and for achieving lifting disposition, shall also be defined in technical specifications.

All structural measures aimed at ensuring efficiency and stability of temporary and permanent supports must be applied. These measures shall be taken to reduce to minimum any damage and inadequate behavior of elements.

Precast elements must be realized in accordance with plans and detailed drawings for equipment and for all programmed operations.

Accurate positioning of elements, dimensional accuracy of supports and joints and, above all, appropriate distribution of elements within the structure, must be checked during positioning of elements, and adjustments must be made if necessary.

Jointing and completion work

The positioning must be thoroughly checked and inspected prior to final connection of precast elements and prior to realization of any stage of final work.

The final work must be carried out in accordance with requirements given in technical specifications, taking at that in account actual climatic conditions.

In-situ works

Every installation of additional reinforcement during final works must be in accordance with Sections of these General Technical Requirements.
All concreting work on the structure shall be compliant with Section.

Structural joints

Joints of every type must be undamaged, properly placed and adequately realized, in order to ensure an efficient behavior of the structure. Poured and glued joints must be realized in accordance with technology specified to that effect, as adjusted to the type of material used.

Project specifications normally contain requirements ensuring that:

- the size of joints is compatible with the gluing procedure,
- steel inserts of any type, used for fastening, are properly protected against corrosion and fire, namely through selection of an appropriate material or protective coating,
- welding of structural joints is carried out with weldable materials and in a controlled manner.

9.8.3 GEOMETRICAL TOLERANCES

All dimensions of the structure must be within maximum permitted deviations so as to avoid any harmful influence on:

- mechanical resistance and stability in the initial period and during use of the structure,
- the behavior of structure during use,
- compatibility during realization of the structure and during installation of its non-structural parts.

Small unintentional deviations from specified values that no not significantly influence behavior of the finished structure may be neglected.

This section contains geometrical deviations that are relevant for engineering structures. Numerical values are expressed for structural tolerances, i.e. for tolerances that are considered relevant for the safety of structures. First class structural tolerances are specified.

Allowable values for the second-class tolerances are not indicated. Second-class tolerances may be defined by the designer. Unless otherwise specified in the design, first-class tolerances specified in these General Technical Requirements shall be applied.

First class tolerances, designated as normal tolerances, comply with design assumptions as given in ENV 1992, and with the required level of safety.

Requirements given in this section are related to the overall structure. In case of individual parts of the structure, every control of these parts must be compliant with requirements for the final control of the finished structure.

Special tolerances must be specified in the design and, at that, the following information must be provided:

- any addition to permitted deviations given in these General Technical Requirements,
- and additional type of deviation that will be controlled together with defined parameters and allowable values,
- whether these special tolerances concern all portions or only some specific portions of the structure.

Tolerances for surfaces between individual parts through which forces are transferred in full contact, are not specified in these General Technical Requirements. Requirements for these surfaces shall be determined, when necessary, in the design.

Tolerances for portions concreted under water are not specified in these General Technical Requirements. If a geometrical tolerance is regulated by several different requirements, then the strictest requirement shall be applied.
These technical requirements do not contain requirements with respect to combined (complex) geometrical tolerances and structural deformations.

Reference systems

Tolerances for positions in the plane are related to the secondary line in the plane.

Tolerances for vertical positions (along the height) are related to the secondary vertical line (along the

height). Any requirement relating to the secondary line must be specified in the design.

Instructions for the determination of secondary lines are given in ISO 4463-1 (Measurement methods for buildings. Setting out and measurement. Part 1: Planning and organization, measuring procedures, acceptance criteria).

Base supports (foundations)

Base supports may be foundations laid directly on the soil, pile heads, etc. Recommended values for center positions are shown in figure below.

N°	Type of deviation	Description	Permitted deviation
a	Horizontal cross section: 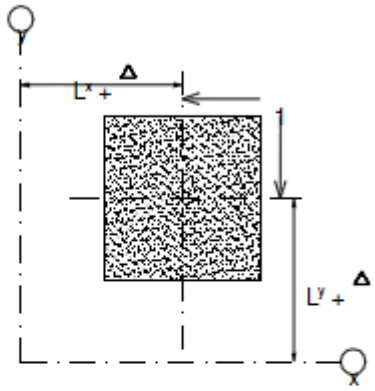 1 support center lines y secondary line in y direction x secondary line in x direction	Position in plan of a base support as related to the secondary lines	± 25mm
b	Vertical cross section: 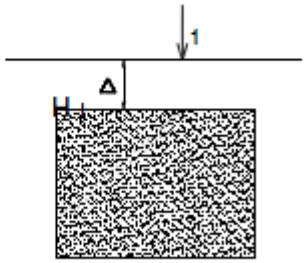 1 - secondary level H - intended distance	Position in vertical direction of a base support relative to the secondary level	± 20 mm

Figure 4 - Permitted deviations for the position of base supports (foundations)

The foundation on the soil may be either directly concreted or formed of a precast element.

Tolerances for deep foundations such as piles, diaphragm walls, special anchors, etc. are not provided in these specifications.

Columns and walls

Allowable structural tolerances for columns and walls are presented in Figure below.

Nº	Type of deviation	Description	Permitted deviation
a	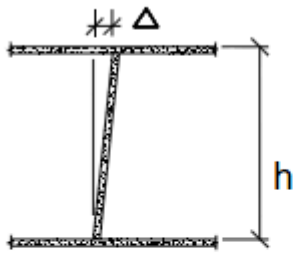	Inclination of a column at any level in a single- or a multi-story building	Not greater than h/300 or 15 mm
b	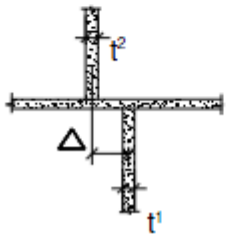	Deviation between center lines for columns and walls	Not greater than t/30 or 15 mm
c	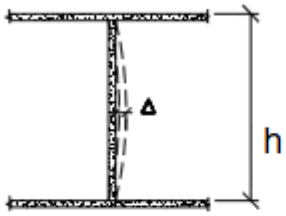	Curvature of a column between adjacent story levels	Not greater than h/300 or 15 mm
d	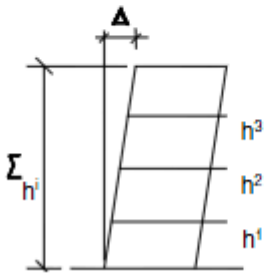	Location of a column or a wall at any story level, from a vertical line through its center at base level in a multi-story structure: n is the number of stories when n >1	Smaller than 50 mm or $\Sigma h/(200n^{1/2})$

Figure 5 – Permitted vertical *deviations for columns and walls*

Instructions for permitted deviations of columns and walls, measured with respect to secondary lines, are presented in Figure below.

N°	Type of deviation	Description	Permitted deviation
a	Secondary line 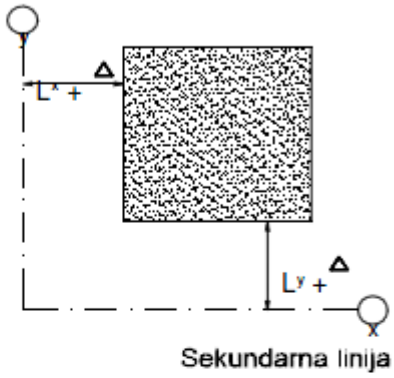	Position of column plan with respect to secondary line	± 25 mm
b	Secondary line 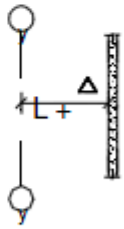	Position of wall plan with respect to secondary line	± 25 m
c	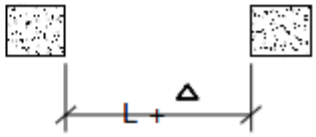	Free space between adjacent columns or walls	Not greater than ±25 mm or ±L/600

Figure 6 –Permitted deviations for column and walls, horizontal cross section

Beams and slabs

Line and level tolerances used for beams and slabs are also applied for other horizontal and inclined structural segments.

Values of allowable structural tolerances for beams and slabs are presented in Figure below.

No.	Type of deviation	Description	Permitted deviation
a	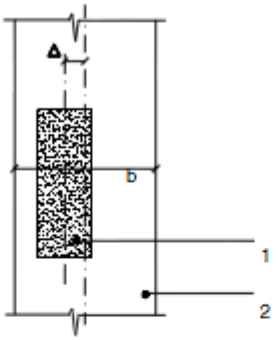 1 - beam, 2 - column	Beam and column connection, measured relative to the column b = column dimension in the same direction as Ä	Not greater than + b/30 or + 20 mm
b	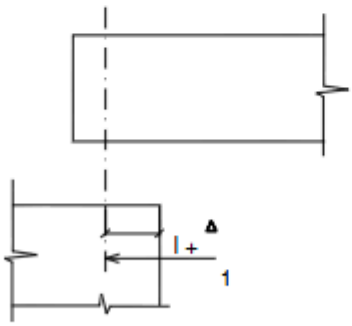 1 - actual bearing axis of support	Position of bearing axis of support l = intended distance from the edge	Not greater than + l/20 or + 15 mm

Figure 7 - Permitted deviations for beams and slabs

Nº	Type of deviation	Description	Permitted deviation
a		Horizontal straightness of beams	Not greater than ±L/600 or ±20 mm
b	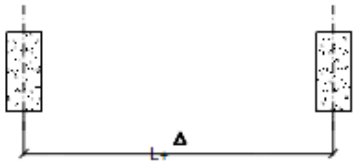	Distance between adjacent beams, measured at corresponding points	Not greater than ±L/500 or ±15 mm, but not more than 40 mm
c		Inclination of beam or slab	±(10+L/500) mm
d	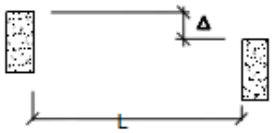	Level of adjacent beams, measured at corresponding points	±(10+L/500) mm
e	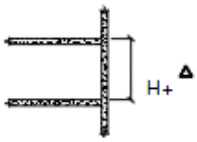	Level of adjacent floors at supports	±15 mm
f	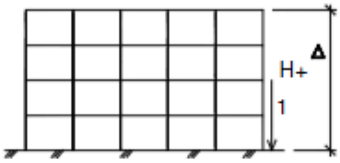	Level of upper floor measured relative to the secondary system: H≤20m 20m<H<100 H≥100m	±20 ±0,5(H+20) ±0,2(H+200)

Figure 8 - Other permitted deviations for beams and slabs

Cross sections

Dimensional tolerances for cross sections, protective layer of concrete and reinforcement shall be as specified in Figure below:

No.	Type of deviation	Description	Permitted deviation
a	Cross sectional dimensions 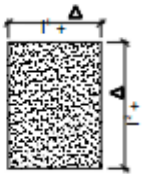	l_i = length of cross sectional dimension. Applicable to beams, slabs and columns. For l_i < 150 mm, l_i = 400 mm l_i = 2500 mm with linear interpolation for intermediate values	+ 10 mm + 15 mm + 30 mm
	For foundations, permitted plus-deviations shall be stated in the project specification, if required. Minus-deviations are as stated. Tolerances for special geotechnical concrete members cast directly onto the ground are not covered here. However, ordinary foundations cast directly onto the ground are covered.		
b	Position of ordinary reinforcement in cross section 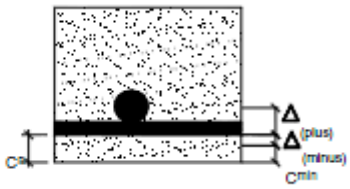	For all h values: Ä (minus) and it is positive for: h < 150 mm h = 400 mm h > 2500mm with linear interpolation for intermediate values	- 10 mm + 10 mm + 15 mm + 20 mm
	c_{min} = required minimum cover c_n = nominal cover = c_{min}+ | Ä$_{(minus)}$ | c = actual cover Ä = permitted deviation from c_n h = height of cross section Requirement: c_n+Ä$_{(plus)}$>c>c_n- | Ä$_{(minus)}$ | Permitted plus-deviations for cover to reinforcement for foundations and concrete members in foundations may be increased by 15 mm. The given minus-deviations apply.		

Figure 9 - Dimensional tolerances for cross sections, protective layer of concrete and reinforcement

Nº	Type of deviation	Description	Permitted deviation
c	Lap-joints 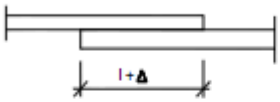	l = length of overlap	-0,06 l
d	Position of prestressed reinforcement. Longitudinal section. 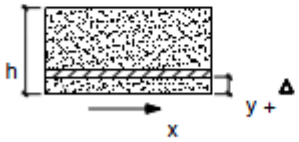	For h<200 mm For h>200 mm Concrete cover measured to duct	+0,03 h Less than +0,03 h or +30 mm -15 mm
	The values given apply to vertical and horizontal location. Permitted minus-deviation from nominal cover for each tendon as for reinforceement, case b.		

Figure 10 - Permitted sectional deviations

Tolerances presented herein are not applicable to prestressed elements. They have to comply with requirements as given in appropriate EN and Albanian standards, or as specified in the design.

Conformity with requirements for the protective layer of concrete is based on every individual measurement, unless a more reliable statistical approach is specified in the design.
Permitted deviation for orthogonality of cross section is seen in Figure below.

No	Type of deviation	Description	Permitted deviation
a	Orthogonality of cross section 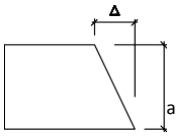	a = Length of cross sectional dimension	Not greater than 0,04a or 10 mm, but not greater than 20 mm deviation + or -

Figure 11 - Permitted deviation for the orthogonality of cross section

Straightness of surfaces and edges

Recommended values for permitted deviations with respect to evenness of surfaces and edges are given in Figure below:

N°	Type of deviation	Description	Permitted deviation
a	Flatness Molded or smoothed surface: global local Not-molded surface: global local 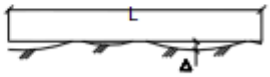	 L=2,0 m L=0,2 m L=2,0 m L=0,2 m	 9 mm 4 mm 15 mm 6 mm
b	Skewness of cross section 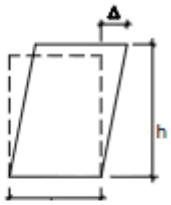		not greater than h/25 ili b/25, but not greater than 30 mm tolerance + or -
c	Edge straightness: 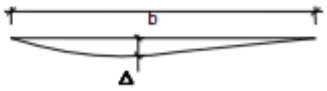	For lengths <±1 m For lengths >1 m	8 mm 8 mm/m, but not greater than 20 mm

Figure 12 - Permitted deviations for surfaces and edges

Holes and inserts

Recommended values for permitted deviations of holes and inserts are given in Figure below.

N	Type of deviation	Description	Permitted deviation
a	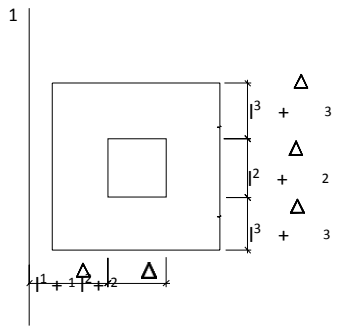 1 - reference line	$Ä_1, Ä_2, Ä_3$	± 25 mm Unless otherwise specified in the project specification

Figure 13 - Recommended values for permitted deviations of holes and inserts

9.9 INSPECTION

Inspection classes

Supervision and inspection shall ensure that the works are completed in accordance with these General Technical Requirements and the provisions of the project specification.

Inspection in this context refers to verifying conformity of the properties of products and materials to be used as well as inspection of the execution of the works.

Requirements for inspection shall be specified using one of the following 3 classes:

- Inspection Class I;
- Inspection Class 2;
- Inspection Class 3.

Inspection class may refer to the complete structure, to components of the structure or to certain materials/technologies used for the execution. Guidelines for the selection of an inspection class are given in Table below.
The three inspection classes give the option to specify the required inspection based on the importance of the component/structure and the criticality of the execution for its ability to fulfill its function.

The inspection class to be used shall be stated in the project specification.

Subject	Inspection1Cl	Inspection Cl	Inspection Cla
Type of construction works	- Buildings 2 stories	- Ordinary bridges - Buildings > 2 stories	- Special bridges - High rise buildings - Large dams - Buildings for nuclear reactors - Containment structures
Type of structural components	- Reinforced beams and slabs with spans < 10 m - Simple walls and columns - Simple foundation structures	- Reinforced beams and slabs with spans > 10 m - Slender walls and columns - Pile caps - Arches < 10 m	- Reinforced arches and vaults - Highly compressed components - Very sensitive and complicated foundations - Arches > 10 m
Type of construction materials/technologies used Concrete acc. to EN 206: - Strength class - Exposure class Reinforcement	- Structures with precast elements Up to and incl. C25/30 X0, XC1, XC2, XA1, XF1 Ordinary	- Structures with precast elements Any strength class Any exposure class Ordinary and prestressing	- Structures with precast elements - Special tolerances Any strength class Any exposure class Ordinary and prestressing

Figure 14 - Guidance for the selection of inspection class

9.10 INSPECTION OF MATERIALS AND PRODUCTS

The inspection of the properties of the materials and products to be used in the works is given in Table 14.

If prescribed concrete is used, the relevant properties are to be checked by tests. The type and number of tests must be specified in project specifications and in the quality control plan for the realization of works.

Subject	Inspection Class 1	Inspection Class 2	Inspection Class 3
Materials for formwork	Visual inspection	In accordance with project specification[3)]	
Reinforcing steel	In accordance with ENV 10 080 and provisions valid at the construction site		
Prestressing steel		In accordance with EN 10138 or according to project specification[3)]	
Fresh concrete;[1)] ready mixed or site mixed	In accordance with EN 206, and based on the project specification. At reception of concrete a delivery ticket shall be present.[3)]		
Other items[2)]	In accordance with the project specification[3)].		
Precast elements	In accordance Section 8		
Inspection report	Not required	Required	

[1)] Site manufactured components are considered as components produced with fresh concrete, ready-mixed or site mixed concrete, unless they are produced according to a product standard.
[2)] For example, items such as embedded steel components, etc.
[3)] Products bearing the third party product certification shall be checked against the delivery ticket and visually inspected.
In case of doubt, further inspection shall be undertaken to check that the product conforms to its specification. Other products shall be subject to inspection and acceptance testing as defined in the project specification.

Figure 15 - Inspection requirements for materials and products

9.11 ACTIONS IN CASE OF NON-CONFORMITY

When a non-conformity is identified during inspection, appropriate measures must be taken to provide for the specified stability and safety of structure and to meet requirements relating to intended use of the structure.

If a non-conformity is confirmed, the following aspects should be investigated:

- the implications of the non-conformity on execution and service,
- the measures necessary to make the component acceptable,
- the necessity of rejection and replacement of the non-repairable component.

The extent of non-conformity of prescribed properties of concrete shall subsequently be determined by performing the same tests on concrete samples from the structural element, in accordance with applicable standards. This testing will be performed, based on the supervising engineer's decision, by an appropriate certification body.

The non-conformity of compressive strength (achieved and specified classes) shall be checked by subsequent testing of concrete samples taken from the part of structure in which non-compliant concrete was placed.

The testing must be performed in accordance with EN 7034 and the objective of testing is to determine the class of compressive strength of concrete at the time of testing, and an approximate class of compressive strength at 28 days. The first information is used for checking stability and safety of the structural element tested, and the second one for regulating contract relations between the concrete producer and the purchaser.

If the implications of the non-conformity on execution and service are negligible, the component should be accepted. If the non-conformity can be corrected, the components should be accepted after proper repair.

The evaluation of conformity after rectification must be made by the supervising engineer and the certification body which initially determined the extent of non- conformity and which specified that the rectification is to be made.

The rectification of non-conformity should be conducted in accordance with the project specification and these General Technical Requirements.

Documentation of the procedure and material to be used should be approved by supervising engineer before the corrections are made.

9.11.1 ACCEPTANCE AND CALCULATION OF CONCRETE WORK

In the scope of acceptance and calculation of completed concrete work on the structure, the supervising engineer shall, together with the representative of the certification body that participated in the control and checking of quality of individual phases of works, establish a summary of the total documentation relating to the realization of works, and they shall provide, each in his sphere of activity, a final opinion about the quality of completed work and about compliance with design requirements as well as with requirements specified in applicable regulations.

The works are usually measured in cubic meters of placed concrete and are calculated according to contract unit prices for each structure and, at that, the price covers all cost of material and work, transport and everything else that is needed for the full completion of the structure.

Specific types and phases of work can also be measured and calculated in an another way, provided that it is clearly specified in the contract.

The costs of establishing non-conformity, and the cost or rectification or replacement of inadequate elements or parts of structure, and their repair to the level compliant with the design and applicable quality regulations, shall fully be borne by the contractor.

Any compensation to be paid to the Client because the quality of work is lower that that specified in the design and applicable regulations, shall be regulated in the construction contract for each particular structure.

9.12 REALIZATION OF CONCRETE WORKS AND STRUCTURES

9.12.1 GENERAL

Culverts and bridges

Culverts are load bearing structures or small bridges up to 10 m in span that are used for evacuation of water coming from ditches and gutters, creeks and small waterways, for the passage of pedestrians and/or vehicles, as well as for the transfer of telephone, electrical and other installations and/or lines from one side of an obstacle to another.

Bridges are engineering structures with one or several openings or spans of more than 10 m in length, that are primarily used as a passage for pedestrians and vehicles and/or installations and utility lines across creeks, rivers, lakes, bays, existing roadways, navigable channels, straits, etc. According to their purpose, traffic and position, culverts/bridges may be classified as follows:

- *road bridges/culverts,*
- *railway bridges/culverts,*
- *pedestrian bridges/culverts,*
- *aqueducts (for water supply and channels),*
- *protective facilities (e.g. under cableways, galleries, etc.),*
- *crane ways,*
- *viaducts (above bays),*
- *overpasses (at a split level intersection, called after the top - previously existing - roadway),*
- *underpasses (at a split level intersection, called after the bottom - previously existing - roadway).*

All materials and construction products used during construction or placed in culverts and bridges must be fully compliant with requirements given in *these General Technical Requirements.*

9.13 CONSTRUCTION OF CULVERTS

Culverts (both monolithic and made of precast elements) must be realized in full accordance with drawings, details, design requirements, and as specified in these General Technical Requirements.

Excavations and all other earth works must be carried out and calculated as specified in Volume II of these General Technical Requirements.

Foundations of culverts, stilling pools, inlets and outlets, sills and flumes, shall be concreted using at least the concrete class C12/15 if these facilities are not situated in the freezing zone, and using concrete class of at least C16/20 if the facilities are exposed to freezing. In the latter case, the resistance to freezing in continental part of the country must be ensured by aeration with no less than 100 cycles.

The works shall be measured in cubic meters of concrete placed in accordance with the design or according to measurements approved by the supervising *engineer, and shall be paid for according to contract unit prices which include all* costs of materials used and placed, construction costs and the cost of full completion of the works.

External surfaces of concrete pipes, walls, vaults and slabs shall be protected (insulated) against water with one cold and two hot coats of bitumen. These coats shall be applied on the dry and clean concrete bedding. The bitumen compliant with quality requirements specified in applicable norms must be used, or its basic prescribed properties must be checked by testing samples taken from supplied quantities. The work shall be measured in square meters of waterproofing and the payment will be made in accordance with unit prices specified in the contract.

Monolithic culverts

Heads, pipes, abutments and wings of pipe and vaulted culverts and the walls, slabs and frames of box culverts must be concreted using at least the concrete class C20/25, and in continental parts of the country its resistance to freezing must be ensured by aeration of no less than 100 cycles.

The works shall be measured in cubic meters of concrete placed in accordance with the design or according to measurements approved by the supervising engineer, and shall be paid for according to contract unit prices which include all costs of materials used and placed, construction costs and the cost of full completion of the works.

Culverts made of precast concrete elements

Appropriate monolithic portions of these culverts (realized on the structure) shall be concreted and calculated in the manner similar to that used for monolithic culverts.

Precast pipe elements (made of concrete or asbestos cement) shall be laid onto the concrete bedding (flume) the quality of which shall comply with Section 8*. The pipes shall be jointed to one another in accordance with details shown* in the design. They must be furnished with certificate confirming their compliance with provisions given in appropriate standards, or these properties must be checked on pipe samples taken from the pipe contingent delivered to the site.

The works will be measured per meter of placed pipes and the payment will be made according to contract unit prices which have to include all costs (supply, transport, placing, connection and everything else that is needed for completion of the works).

9.14 CONSTRUCTION OF BRIDGES

Being the most sensitive and most vulnerable of all transport facilities, bridges will have to be realized in accordance with working design in which all solutions and details for every type and phase of work, as contained in the final design, will be fully elaborated.

In addition to general provisions, as specified in Section 0 of these General Technical Requirements, the final design must also contain a detailed description of the structure and its components and devices, detail drawings of the formwork and reinforcement with connections and protective layers, while scaffold design *and formwork design must also be provided in case of technologically more* complex structures.

Quality requirements for materials and works must be specified in accordance with General Technical Requirements and according to actual environment in which the structure will be used, particularly if the structure is subjected to any type or class of aggressive environment specified in these General Technical Requirements.

The quality control program for materials, placed products and realized works must be elaborated in accordance with the determined and specified quality requirements, and the strict application of this program will enable fulfillment of specified properties and quality requirements.

In the working design, a special attention must be paid to:

- *size and character of load and environmental influences to which the structure will be subjected,*
- *method and technology for the realization of all types and phases of work,*

- *accurate dimensions of all structural elements with indication of level for individual positions,*
- *position and attachment of reinforcement, especially prestressing steel, which must be positioned at sufficiently small intervals,*
- *phases and methods*
- *of concreting, and places and methods for interruption and continuation of concreting activity,*
- *prestressing phases with prestressing sequence and force values,*
- *details relating to anchoring and protection of prestressed cables,*
- *phases and method for the grouting of prestressed cables,*
- *measures for the protection of steel against corrosion (prior to, during and after installation),*
- *method for concrete placing and curing,*
- *conditions and time for the release of scaffold and removal of formwork,*

The following principal types of work may be differentiated on bridges:

- *preliminary work,*
- *earth work,*
- *erection of scaffold and formwork (wooden, metal, etc.),*
- *assembly of precast elements,*
- *stonework,*
- *concrete work,*
- *metal work (mostly for railings),*
- *pavement surfacing (including waterproofing activities),*
- *work on expansion joints,*
- *finishing and other work.*

Prior to any work, the contractor is required to obtain, for all types of work, materials and products, appropriate certificates attesting to their conformity with

properties specified in appropriate standards, or shall conduct appropriate testing on delivered quantities of materials and products, while the testing for materials produced on the site will have to be conducted as defined these General Technical Requirements and as specified in the quality control program.

If the Contractor identifies during realization of the structure that a designed feature or construction method must be modified, then the design must be extended or modified as appropriate. This decisions will jointly be made by the Designer, Client and Contractor. All changes and extensions must be registered by protocol and included in the working design. Minor changes may be registered in the site diary. An addendum to the building permit is required for major and significant changes that are of consequence to the stability and safety of the structure or a significant portion or element thereof.

The following must be provided in bill of quantities and cost estimates for all types of work: detailed description, measurements, quantities and value of individual works to be realized, and the total value of work, without completion time.

9.15 ACCESSORY CONCRETE STRUCTURES

Accessory concrete structures are:

- *drainage and environment protection facilities,*
- *facilities that enable operation of roads (toll stations, maintenance depots, etc.),*
- *road maintenance structures,*
- *roadside service facilities (rest areas, filling stations with shops, service stations, motels, etc.),*

All accessory concrete structures on roads must be designed and realized as specified in these General Technical Requirements and in accordance with applicable regulations. these General Technical Requirements.

A special attention must be paid to the design and construction of accessory concrete structures whose elements, such as drainage elements (New Jersey parapets, curbs and gutters) and bottom elements of toll ramps, are directly exposed to the aggressive freezing action and deicing salt. They should be designed and realized using concrete with water/cement ratio of less than 0.40, resistant to freezing and deicing salt during 50 test cycles, as specified with a sufficient (separately specified in these requirements) protective layer of concrete in case of reinforced elements and, finally, with a reliable wet curing during at least 10 days i.e. in the initial phase of hardening.

To achieve such resistance to freezing and deicing salt, they must be aerated in an optimum manner, with the percentage of entrained air adapted to the use of maximum aggregate size, or to the quantity of mortar in concrete.

9.16 CONCRETE PAVEMENT

This Volume IV of General Technical Requirements provides requirements for the production of concrete and realization of concrete works. As to other requirements that are not specified in this Volume, the requirements from Volume II (for earthwork) and III (for pavement structure) of these General Technical Requirements, will be applied as appropriate.

The concrete pavement structure is composed of slabs of specified dimensions, separated from one another with joints, or of continuous reinforced slabs without joints, which are laid onto the bedding made of bituminous or cement stabilized gravel (or crushed stone).

9.17 CALCULATION OF WORK

The work relating to caisson fabrication shall be measured per cubic meter of excavated material taking into account the plan projection of caisson, its outside edge and depth of excavation. The calculation shall be made according to contract unit prices. The work covers excavation, removal of excavated material, caisson sinking, caisson position rectification, repair in case of damage by blasting, support work if required, and any other additional activities.

The work and unit price of soil excavation behind sheet piles and in cofferdams shall include excavation of foundations, transport of excavated material, pumping and evacuation of water, and shall be calculated according to a separate pay item.

The work and unit price for the excavation of foundations by open boxes or wells comprises excavation and removal of excavated material, pumping and evacuation of water, box or well sinking, as well as excavation and all necessary support and handling, and shall be calculated according to a separate pay item.

The backfilling work shall be measured per cubic meter of placed and compacted backfill material for foundations, and shall be calculated per contract unit prices.

Other earthwork shall be calculated and performed in accordance with provisions contained in these General Technical Requirements.

9.18 STEEL STRUCTURES

Activities

The steel lagging solution shall be specified in the design, and the work will be realized by steel lagging which will be disassembled after use and which will remain property of the Contractor.

Steel elements made of rolled sections and steel sheets that are not included in the unit price of concrete, e.g. load bearing portions of wooden scaffolds,

appropriate steel elements of wells and caissons, etc., shall be realized in accordance with solutions presented in the design. They shall be measured per kilogram of steel placed, and the calculation will be made according to contract unit prices. Such steel elements must be coated with the basic and final anticorrosive paint.

Steel formwork that is most often used in the fabrication of larger series of prefabricated elements using thermal rapid-hardening processes, shall be fabricated based on special workshop drawings in accordance with requirements from these General Technical Requirements. The work and materials shall not be measured and calculated separately, but shall be contained in the price of cubic meter of concrete placed.

Tubular steel formwork and steel scaffolds made of rolled sections, such as:

- *fixed steel scaffolds,*
- *movable steel scaffolds,*
- *steel scaffolds for free cantilever concreting, and*

- *movable steel scaffold leaning on bridge structure,*

shall be designed and realized in accordance with regulations applicable for steel structures.

Seamless steel pipes that are sometimes used as external lining for concrete pendulums and other supports, and as lining and load bearing parts of concrete piers, shall be installed in accordance with the design. The external surface of pipes must be coated with the basic and final coat of anticorrosive paint, as specified in the design and in accordance with applicable regulations.

9.18.1 QUALITY CONTROL

The quality control for works and materials shall be conducted as specified in these General Technical Requirements.

9.18.2 CALCULATION OF WORK

The work shall be measured per square meter of finished cofferdam. The calculation shall be made based on contract unit prices, and shall include everything that is needed for the full completion of the work.

The work relating to all types of steel scaffolding shall normally be measured and calculated per cubic meter of concrete placed or element completed, although it can also be measured and calculated separately, if agreed between the Client and the Contractor, based on contract units and unit prices.

The pipe installation work shall be measured per kilogram of pipes laid, and the calculation with be made according to contract unit prices.

Other works shall be calculated as specified in other sections of Volumes II and III of these General Technical Requirements.

9.18.3 QUALITY CONTROL

All concrete components, placed concrete (either ready-mixed or produced on site), placed steel for concrete reinforcement, high strength wire and cables for concrete prestressing and realization of concrete works, must be fully compliant with requirements specified in these General Technical Requirements, as well as with requirements given in applicable standards and other regulations.

Prior to the commencement of each concreting activity, the Supervising Engineer shall check and confirm that the steel for concrete reinforcement, high strength steel wire, prestressing cables and concrete, are compliant with design requirements and applicable regulations.

The Contractor must have at his disposal a detailed concreting plan and the plan and program for checking and confirming conformity of concrete with requirements given in these General Technical Requirements, as well as with requirements contained in structural design. The concreting plan must contain data about the source of concrete and method of concrete delivery, including stand-by capacities, and also information about the type and number of concrete placing devices and the placing procedure and, finally, data about substances and devices that are needed for the cure and protection of concrete.

9.18.4 CONCRETING OF FOUNDATIONS

The foundation pit must be protected and water, if any, must be evacuated from the pit prior to the commencement of foundation concreting activity. The Supervising Engineer (together with geotechnical

engineer and designer, if necessary) shall check the bearing capacity of foundation soil in order to determine whether it is compliant with design assumptions. The concreting shall start immediately after it has been approved by the Supervising Engineer.

Concreting under water shall be permitted if it has been planned in the structural design and if approved by the Supervising Engineer. At that, no bleeding of concrete shall be permitted and, if the bleeding does occur, the surface layer affected by bleeding shall be removed without delay. The quantity of cement in concrete that is placed under water must not be less than 350 kg par cubic meter of placed concrete.

If foundations are concreted with reinforced concrete that will be used in exposure classes XD2, XD3, XS2 and XS3, the minimum thickness of the protective concrete cover must be 75 mm in exposed zones and 100 mm in unexposed zones.

9.18.5 CALCULATION OF WORK

The work shall be measured per cubic meter of placed concrete and the calculation with be made according to contract unit prices, which shall include all cost of work, materials, transport, final treatment, curing and protection.

9.18.6 CONCRETING OF PILES

The type, shape, dimensions, reinforcing method and concrete class of piles shall be specified in the design which has to be compliant with applicable regulations for the design and construction of foundations for structures.

C25/30 shall be the minimum class of concrete for finished piles that are concreted outside of the foundation soil and are then driven into it. Pile driving may commence when the concrete of such piles has attained the specified class. The first pile that has been driven will be considered as the test pile. All elements needed for checking and confirming compliance with load bearing requirements specified in the design (dimensions and position in the foundation pit, hammer weight and height of fall, and penetration rate after every 10 blows) shall be measured and recorded (in an appropriate protocol) during the driving of such test pile. All these elements must also be recorded, either in protocol or in site diary, for the remaining piles.

All pile driving activities must be realized in accordance with the design by specialized contractors having sufficient and documented experience in this type of work. The bearing capacity of piles shall be proven by load testing in cases when bridge foundations are supported by a number of such piles in soil of poor bearing capacity, and especially when piles take on the load through sheathing. Prior to pile concreting, the Supervising Engineer has to check the position of reinforcement, and especially the thickness of the protective concrete cover. In the course of concreting, the checking will consist in determining the progress rate, any interruptions in concreting, and the quantity of placed concrete which will also be the basis for estimating the level to which the borehole has been filled with concrete.

Piles realized in an unacceptable manner, piles exposed to excessive deformations, piles deviating from positions specified in the design, or piles insufficiently filled with concrete, will have to be replaced with new piles, and the cost of such replacement will be borne by the Contractor.

9.18.7 CALCULATION OF WORK

The work will e measured per meter of realized piles and the calculation with be made according to contract unit prices which will cover all work, material used and treatment of pile head to enable connection with the head beam or slab.

9.18.8 CONCRETING OF PIERS, MASSIVE WALLS AND VAULTS MADE OF NON-REINFORCED CONCRETE

These elements will be fabricated in accordance with the dimensions, concrete quality and details specified in the structural design, and shall be realized with stone revetment or without such revetment. If used, the stone revetment shall be of sound rock, adequately resistant to freezing as determined during at least 100 cycles by testing conducted in accordance with an applicable standard.

Piers, walls and vaults without revetment shall be concreted in smooth formwork with subsequent surface treatment or without such treatment, while the same elements with revetment shall have stone revetment in designed thickness, and an architectural treatment of surface will additionally be provided.

9.19 SHOTCRETE

Shotcrete is a kind of concrete that is sprayed in the current of air under pressure through special nozzles and is applied to the surface at high speed and energy, where its compaction and bonding with the surface takes place.

When dry process is used, the water under pressure is added to the cement and aggregate mix at the nozzle, while in wet process the finished mix (with the consistency of 3 to 5 cm per measure of settlement) is supplied to the nozzle.

The shotcrete application procedure (dry or wet) shall be selected by the designer according to the planned use and quality requirements for concrete, taking into account placing conditions and cost requirements. The specified quality of concrete must always be the first priority. The dilemma with the selection of the spraying procedure basically arises from the fact that the dry process provides better concrete (more compact and harder concrete, with better adherence to the surface) but is also characterized by a higher rebound of material, especially on vertical surfaces and when applied from underside in an upward direction, and also by excessive dust, which is especially disturbing when the work is carried out in an enclosed space.

9.19.1 PREPARATION OF SHOTCRETE MIX

Components similar to those used for other types of concrete meeting similar quality requirements and complying with requirements given in these General Technical Requirements, shall be used for the preparation of shotcrete mix.

The shotcrete shall be specified in the design according to EN 206 as designed concrete (with properties prescribed according to EN 206 or as prescribed concrete (defined according to its composition). The first method is usually applied for wet procedure and the second for dry procedure.

In the dry procedure, the cement to aggregate ratio shall range, depending on the prescribed strength, from 1:6 (for C 25/30) to 1:2 (for C 40/50). After spraying, this ratio is reduced and usually ranges from 1:4 to 1:1.2 because the rebound mostly consists of coarser aggregate grains. For that reason, the use of maximum aggregate grain in excess of 16 cm shall be avoided.

The production of both mix types must be fully compliant with requirements contained in these General Technical Requirements. The checking and confirmation of conformity of mix production will be conducted for wet procedure in the manner similar to that used for

ordinary concrete, and for dry procedure on sprayed shotcrete in accordance with provisions contained herein.

At that, the class, i.e. typical compressive strength at 28 days, will be specified in case of designed shotcrete and, if necessary, some of the following properties will also be defined:

- *minimum cement quantity,*
- *maximum water/cement ratio,*
- *compressive strength,*
- *toughness,*
- *early strength,*
- *impermeability,*
- *water absorption,*
- *adherence to the surface.*

The following shall be specified in case of prescribed composition shotcrete:

- *type and quantity of cement,*
- *water/cement ratio or consistency,*
- *cement to aggregate ratio,*
- *type and quantity of fibers,*
- *type and quantity of aggregate,*
- *type and quantity of chemical admixtures,*
- *type and quantity of mineral admixtures.*

In case of dry procedure the water/cement ratio usually ranges from 0.35 to 0.50, while it is about 0.45 in case of wet procedure.

9.19.2 REALIZATION OF SHOTCRETING WORK

Surface onto which shotcrete will be applied and shotcreting equipment have to be prepared in an appropriate manner before the commencement of shotcreting operations.

The following actions are necessary in case of rocky surface:

- *weathered and loose elements shall be removed,*
- *the rock will be analyzed to determine whether support work is needed,*
- *bearing capacity of the rock will be determined,*
- *water will be evacuated by drains or its passage will be blocked,*

The following actions have to be taken on surface of the concrete structure to be improved by shotcreting:

- *condition of the structure and its surface will be determined,*

- *causes of damage will be identified and, if possible, eliminated,*
- *damaged and other weathered parts will be removed,*
- *surface layer of concrete affected by carbonization, chlorides and other aggressive substances will be removed.*

The equipment for the shotcrete mix transport and spraying must be properly dimensioned (compressor capacity must be at least 10 cubic meters of compressed air, with pressure ranging from 2.5 to 3.0 bars, so tat an uniform spraying rate can be obtained; the water shall be supplied to the nozzle under pressure of about 4.0 bars, always more than the air pressure).

The surface must be properly wetted and greater cracks and holes must be filled prior to the commencement of shotcreting. The shotcrete shall be sprayed starting at the bottom and progressing towards the top.

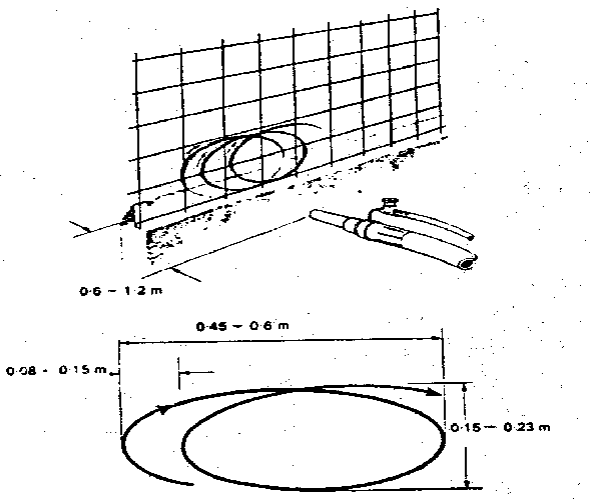

Figure 16 - Proper shotcrete spraying sequence

It should be noted that the basic precondition for good quality shotcreting is proper spraying procedure, i.e. proper handling of the jet nozzle which must be operated by a properly trained and experienced operator. This operator will have to check the working condition of the equipment, particularly that of pressurized pipes and connections, before every shotcreting operation. The nozzle must be held vertical to the surface at an optimum distance (0.6 to 1.2 m) and shall be moved in spiral motion as shown in Figure above.

Surfaces sprayed with shotcrete shall be protected against evaporation using procedures similar to those applied for the ordinary concrete (in full accordance with requirements given in these General Technical Requirements and as specified in EN 206).

The rate of rebound given in Table below may be adopted when designing and calculating shotcreting work performed using the dry procedure.

Surface (spraying direction)	*Rebound (mass %)*

Floor or floor slab	*5-15*
Inclined wall and vertical wall	*15-30*
Ceiling	*25-50*

*Figure 17 - Rebound in case of shotcreting according to dry procedure***Slope Protection**

9.20 ROCK BOLTS

9.20.1 GENERAL

The Contractor will supply, install, test the anchors, as specified in the project. The element consists of a steel bolt with a length of 4 to 10 m with a maximum diameter of 40 mm, which is inserted into a drilled hole.

The following types of reinforcing elements will be used:

• Fixed bolts

The type of length, diameter, slope and model of the anchors are defined in the drawings. Round bolts with all accessories and other materials needed for installation, and their fixing will be placed. The bearing plates must be flat or paved steel plates with minimum dimensions 150x150x10 mm and must comply with ASTM Specification A 36.

• Sloping or hemispherical washers

Must be made of steel according to ASTM Specification F432. All surfaces of retaining plates, washers and joints and threads at the projected ends of rock bolts should be protected and lubricated with rust-preventing compound.

When anchors are used in connection with wire mesh, the mesh must be firmly connected to the bolts by means of additional steel plates. The wire mesh should not be placed between the rock and the retaining plate

9.20.2 ANCHOR TESTING AND MONITORING

The contractor must supply at least the fixing device, the hydraulic pump with manometer, the extension meter and all the necessary accessories. Prior to the installation of the anchor in the works, a series of attractive tests will be performed on different types of stones determined by the Engineer and which will be representative of the rock expected to be encountered during the excavations to test the suitability of the anchor proposed by the contractor.

During the indirect test, the applied load and motion must be measured. At least 5 tests will be required for each rock type / installation type combination to be able to assess rock suitability.

Tensile tests must be performed well before the installation of the anchor, so that, if the anchors proposed by the Contractor do not meet the requirements of the tensile load, the contractor will have time to equip and test another type of anchor.

The Contractor shall keep detailed records of the tensile tests, the result of which shall be used for the relationships established between the quality of the stones and the type of anchor. During the development of the work, the contractor must perform tensile tests, in the presence of the Engineer, at least 1 per 100 anchors installed. The engineer, in consultation with the contractor will determine the anchors to be tested.

9.20.3 HOLES AND PREPARATION FOR INSTALLATION

The diameter of each hole must be in accordance with the manufacturer's recommendations, except for fixed rods where the hole diameter must be at least 1.5 times larger than that of the rod specified for that hole. The length of the hole must be such as to accommodate the designated anchor and secure its anchorage.

After drilling, any holes in the compact rock will be washed with clean water and cleaned of debris with compressed air. Holes that tend to swell or are interrupted by friction filled with clay should only be cleaned with compressed air. Compressed air should not contain any oil or other material that prevents bonding.

9.20.4 SELF DRILLING ANCHORS

Anchors (bolts) must be in accordance with EN 14490. Self-drilling anchors - provided by a number of products - must be used in poor soil conditions where the holes will not remain open after drilling. They consist of a continuous steel rod. In the first step they are used as drilling rods and then the joints to be injected to adjust it and improve the stability of the slope.

The minimum force of anchors must be 200 KN. The on-site application must comply with the specifications of the respective supplier. Once the bolt is in place, the high gap between the bolt and the anchor plate must be solidified to provide sufficient corrosion protection and bearing capacity.

Anchor plates and bolts must be protected against corrosion by laying concrete as shown in the drawings or specified by the supplier.

Bar	R25N
Outside Diameter (mm)	25
Internal Diameter (mm)	12
Cross Sectional Area (mm^2)	292
Ultimate Load (kN)	200
Yield Load (kN)	150
Weight (kg/m)	2.3
Thread Type	ISO10208
Type of Steel	EN10083-1
Thread (Left / Right hand)	Left or Right
Length (m)	(1) x 2, x3, x4, x5, x6, x7, x8, x9
Optional of Anti-corrosion	Hot-dipped Galvanization: ISO 1461 Epoxy Coating: Bending properties up to standard ISO 1519 Impact properties up to standard ASTMD 2794 Adhesion up to standared ISO 2409:2007

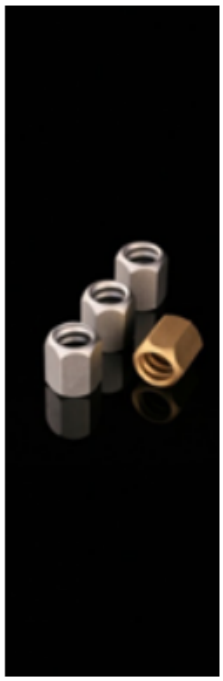

Nut	R25N
Key Size (mm)	41
Length (mm)	35
Hardness (HRC)	25 - 30 (*) *In a certain range, tensile strength increase in proportion to hardness. For couplers and nuts, it's important to make sure the fitting capacity reaches bar's capacity. Through hundreds of rounds of testing, a lab standard is set up which is HRC 23 - 30 for couplers and HRC 25 - 30 for nuts.
Thread Type	ISO10208
Type of Steel	CK45
Unit Weight (kg)	0.25
Thread (Left / Right hand)	Left or Right
Optional of Anti-corrosion	Hot-dipped Galvanization: ISO 1461 Epoxy Coating Bending properties up to standard ISO 1519 Impact properties up to standard ASTMD 2794 Adhesion up to standared ISO 2409:2007

Coupling	R25N
Outside Diameter (mm)	42
Length (mm)	150
Hardness (HRC)	23 - 30 (*) *In a certain range, tensile strength increase in proportion to hardness. For couplers and nuts, it's important to make sure the fitting capacity reaches bar's capacity. Through hundreds of rounds of testing, a lab standard is set up which is HRC 23 - 30 for couplers and HRC 25 - 30 for nuts.
Thread Type	ISO10208
Type of Steel	EN10083-1
Unit Weight (kg)	0.60
Thread (Left / Right hand)	Left or Right
Optional of Anti-corrosion	Hot-dipped Galvanization: ISO 1461 Epoxy Coating Bending properties up to standard ISO 1519 Impact properties up to standard ASTMD 2794 Adhesion up to standared ISO 2409:2007

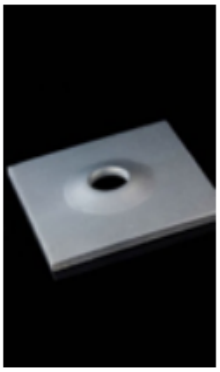

Plate	R25N
Size (mm)	150 x 150
Thickness (mm)	8
Hole Diameter (mm)	30
Unit Weight (kg)	1.4
Optional of Anti-corrosion	Hot-dipped Galvanization: ISO 1461 Epoxy Coating: Bending properties up to standard ISO 1519 Impact properties up to standard ASTMD 2794 Adhesion up to standared ISO 2409:2007

Drill bit adapter	R25N
Anchor Bar Thread	R25
Drill Bit Thread	R32 / R38 / T40
Length (mm)	50
Unit Weight (kg)	0.1

Tabela 94 - Të dhënat e ankorimeve të vetë-shpimit

Table 95 – Self-drilling anchors data

9.21 DOUBLE TWISTED WIRE MASH

9.21.1 GENERAL

The net is a woven geocomposite composed of steel wire and cables assembled together in a hexagonal shape for the double production of the wire mesh. The mesh rolls have a standard length of 25-50 m and a height of 3 m.
• MO (mono oriented) steel mesh. Steel cables, with 8mm diameter, are used instead of conventional wire and are woven in length / distance of 1.5 m.
• BO steel mesh (bi oriented). Cables, diameter 8mm, are used instead of conventional wire and are woven in length / distance of 1.5 m.
• (except BO 300 grid where steel cables are inserted at a distance of 3.0 m). Steel cables are also inserted in the cross direction through the mesh at distances of 300 - 200 - 150 cm
• (BO 300 mesh - BO 200 mesh - BO 150 mesh) and are fixed with ferrules to form a loop around the cables.

9.21.2 REQUIRED SPECIFIACTIONS

-Elastic Strength

The net used for rock protection must have a tensile strength of 380-550N / mm2 exceeding the requirements of EN10223-3, in order to increase the tensile strength of the finished products. Wire tolerances shall comply with EN10218 (Class 1).

-Duration

The elongation must not be less than 10%, in accordance with EN10223 -3. Testing should be performed on a sample at least 25 cm long.

The main values for the material must be in accordance with EN 10245-5:
• Density / Specific Weight: ≤1.15g / cm3 in accordance with ISO1183.
• Strength: Maximum 82 by the ISO2039-2 test method.
• Elastic strength: Minimum 30 MPa, in accordance with ISO527-2 / 1 / B / 5.
• Extension: Not less than 200%, in accordance with ISO5277-2 / 1 / B / 5.
• Resistance to UV radiation: After 4000 hours of exposure to UV light in accordance with ISO4892-2, tensile strength and elongation at rest will not change by more than 25%.
• Chemical resistance: Resistance to chemicals at concentrations that are normally present in soil and surface water.
• Adhesion of the polymer: Adhesion of the polymer layer to the steel wire must be in accordance with EN10245-5, in accordance with EN10245-5, in accordance with the minimum requirements of Level 1 to 3 in accordance with EN10245-1.
• Temperature: not higher than -30 ° C in accordance with ASTMD7461.2.4

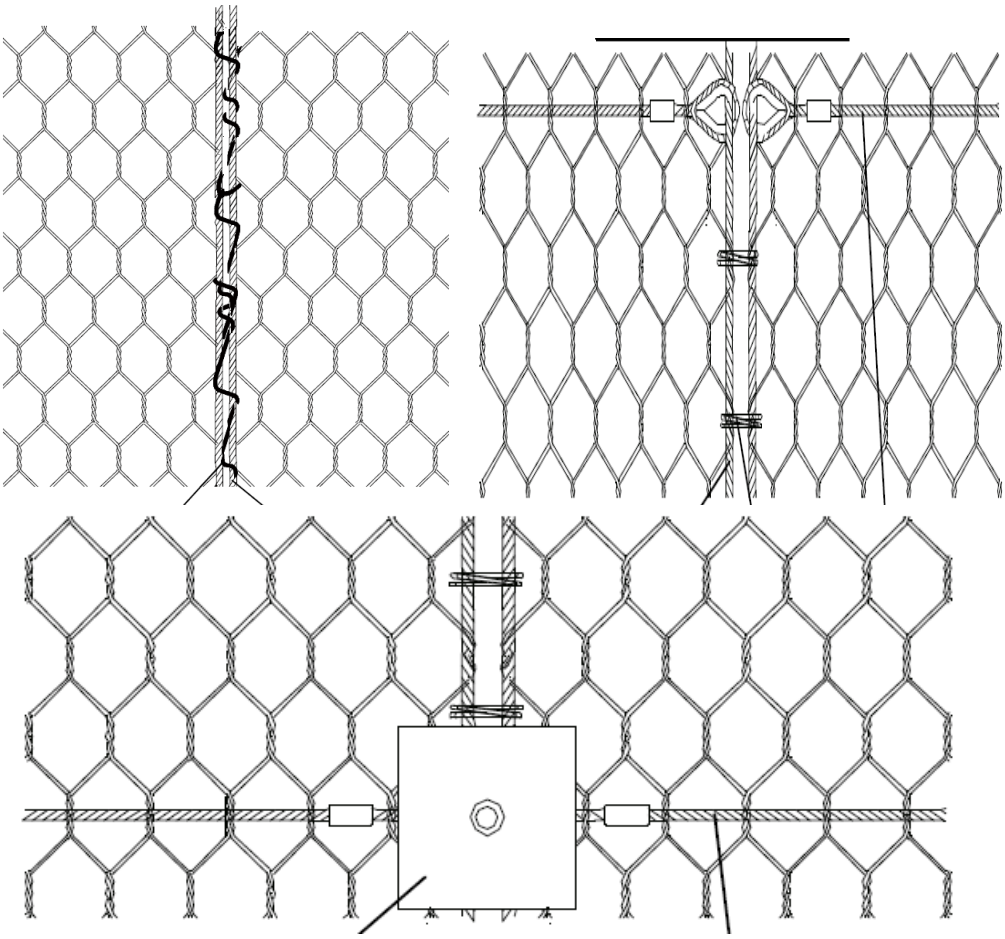

Figure 18 – Double Twisted Wire Mash Example

9.21.3 TOLERANCES

The mesh opening tolerance is the distance 'D' between two consecutive rotations, specified according to EN 10223-3

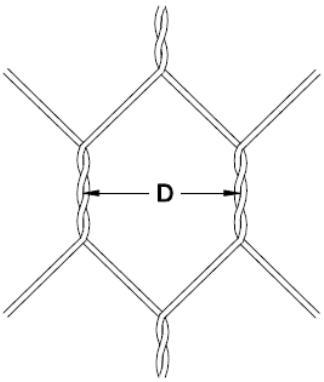

(Mesh Type)	D (mm)	ø Wire (mm)
8x10	80	3.00
Wire mash	**ø mm**	3.00
Tolerance of wire	**(±) ø mm**	0.07
Galmac min quantity	**gr/m²**	255
Strands (vertical and horizontal)	**ø mm**	8.00

9.22 STEEL WIRE ROPE

9.22.1 REQUIREMENTS AND STANDARDS

·Galmac Clothing Class B EN 10264 - 2
· Diameter (mm) Ø = 20
· Construction 6x7 IWS EN 12385-2; EN 12385-4
· Steel grade 1770 N / mm2 EN 12385-4
· Minimum load for cable cutting 254kN EN 12385-4

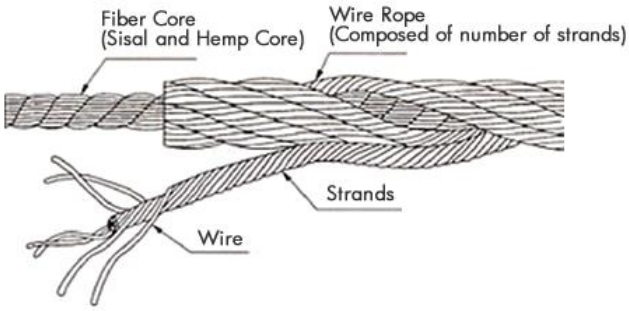

Table 96 - Steel Wire Rope Example

The wire shall be manufactured from wire rod in accordance with EN 10016-4, from steel in accordance with prEN 10138-1:2000, 6.1.
There shall be no welds in the product as supplied by the manufacturer.
One line of indentations shall be at a contrary angle to the others.
The nominal diameter of indented wire is the nominal diameter of plain wire having the same cross-sectional area.
When a length of wire is lying free on a flat surface, the maximum bow height from a base line 1 m in length,
measured from the inside of the curve, shall be not greater than 25 mm for all wire diameters.

Steel designation		Nominal [a]				Specified			
Steel name	Steel number	Diameter [f] d mm	Cross sectional area S_n mm²	Tensile strength [b c] R_m MPa	Mass [d] M g/m	Permitted deviation on nominal mass %	Characteristic value of maximum force F_m kN	Maximum value of maximum force $F_{m,max}$ kN	Characteristic value of 0,1 % proof force $F_{p0,1}$ [e] kN
Y1860C	**1.1353**	**3,0**	**7,07**	**1860**	**55,2**	**± 2**	**13,1**	**15,0**	**11,3**
		4,0	**12,57**		**98,1**		**23,4**	**26,7**	**20,1**
		5,0	**19,63**		**153**		**36,5**	**41,8**	**31,4**
Y1770C	1.1352	3,2	8,04	1770	62,5	**± 2**	14,2	16,2	12,2
		5,0	19,63		153		34,8	39,5	29,9
		6,0	**28,27**		**221**		**50,0**	**56,9**	**43,0**
Y1670C	1.1351	6,9	37,39	1670	292	**± 2**	62,4	71,0	53,7
		7,0	**38,48**		**301**		**64,3**	**73,0**	**55,3**
		7,5	44,18		345		73,8	83,8	63,4
		8,0	**50,27**		**393**		**83,9**	**95,4**	**72,2**
Y1570C	1.1350	9,4	69,4	1570	542	**± 2**	109	124	90,4
		9,5	70,88		554		111	126	92,4
		10,0	**78,54**		**613**		**123**	**140**	**102**

[a] The nominal modulus of elasticity may be taken as 205 GPa (kN/mm²).
[b] 1 MPa = 1 N/mm².
[c] The nominal tensile strength is calculated from the cross-sectional area corresponding to the nominal diameter and the specified characteristic maximum force, rounded to the nearest 10 MPa.
[d] The nominal mass is calculated from the nominal cross-section area and a density value of 7,81 kg/dm³.
[e] For wires larger than 8 mm the specified characteristic $F_{p0,1}$ is approximately 83 % of the specified characteristic maximum force. For wires of 8 mm and smaller the corresponding value is 86 % of the specified characteristic maximum force.
[f] See Annexes A and B for comments on classes of convenience.

Table 97 - Dimensions and properties of wire

10. WATERPROOFING

Description

This section of General Technical Requirements covers realization of waterproofing, based on bituminous products, as applied or concrete road facilities.

The waterproofing is conducted to prevent corrosive action of water and that of aggressive substances dissolved in water.

The complete waterproofing system is formed of:

- *foundation layer,*
- *sealing layer and*
- *protective layer.*

The foundation layer is used for establishing contact between the concrete bedding and the sealing layer and for filling pores in the concrete bedding. It is made of the two-component epoxy resin or of a cold bituminous coating.

The sealing layer prevents penetration of aggressive substances into the concrete bedding, and is made of bituminous strips or mastic asphalt.

The protective layer protects the sealing layer against mechanical and other damage, and is made of poured or rolled asphalt, depending on the way in which the sealing layer is realized.

10.1 GENERAL PRINCIPLES FOR THE INSTALLATION OF WATERPROOFING

In general, the waterproofing will have to be installed when weather conditions are favorable, i.e. when prescribed limit values for temperature and air humidity can reasonably be respected. The waterproofing work must therefore be scheduled in such a way that it is realized during a favorable time of the year.

If it is indispensable to realize waterproofing under unfavorable weather conditions, then special protection measures must be taken so that the waterproofing can be realized in accordance with requirements (e.g. by covering a part of the structure on which waterproofing is to be realized).

As a rule, the concrete slab must be at least 21 days old prior to the start of the waterproofing work.

The contractor has to announce on time the bedding work, and to provide, also in due course, the plan for the realization of every next stage of the work.

All stages of the work, from bedding preparation to the realization of the protective layer, must be performed continuously, and in shortest possible time.

The work process shall be organized in such a way that a continuous drainage of every realized surface is ensured.

The surface of the concrete slab must be even, clean and dry, without any loose or poorly bonded material or dust.

Oil stains and other substances that are difficult to remove shall be eliminated by sanding or water jet under pressure.

Deviations from the prescribed evenness, as measured by straightedge 3 m in length, must not exceed:

- *30 mm for the segment 3 m in length,*
- *15 mm for the segment 2 m in length,*
- *10 mm for the segment 1 m in length.*

Prior to the start of waterproofing work, the Contractor is required to make a topographic survey of the concrete slab surface, measure longitudinal and transverse evenness, and submit the measured and treated data to the Supervising Engineer at least seven days prior to the start of the waterproofing work.

If necessary, the Supervising Engineer shall submit to the Contractor an order to repair the concrete bedding in order to make the concrete surface compliant with evenness requirements.

The mean breaking strength of the repaired concrete bedding must be at least 1.5 N/mm^2, and any individual results must not be less than 1.0 N/mm^2. The breaking strength shall be tested in accordance with ZTV-SIB 90, Anhang 2.

The Contractor is required to ask for the Supervising Engineer's approval for the repair method proposed by the Contractor and for the type of material to be used in the repair.

The following two types of waterproofing are considered in these General Technical Requirements:

- *waterproofing with bituminous strips (glued waterproofing) and*
- *waterproofing with mastic asphalt (non-glued waterproofing).*

10.2 BITUMINOUS COATING

Property	*Unit of measure*	*Requirement*	*Test method*
Bitumen content	*%(m/m)*	*30 to 50*	
Softening point of extruded bitumen: *- oxidized bitumen* *- road-construction bitumen*	*°C*	*80 to 125* *54 to 72*	*EN 1427*
Penetration of extruded bitumen:	*1/10 mm*	*10 to 45*	*EN 1426*
Max, breaking point according to Fraass: *- oxidized bitumen* *- road-construction bitumen*	*°C*	*- 10* *- 2*	*EN 12593*
Abel-Pensky flash point, minimum	*°C*	*21*	
Flowout time	*s*	*15 do 80*	*EN ISO 2431*
Maximum drying time	*h*	*3*	

Figure 19 - Quality requirements for the basic bituminous coating

Table 9-2 Quality requirements for joint sealing bituminous compound

Property	Unit of mea	Requireme	Test methoc
Minimum softening point	°C	85	EN 1427
Maximum stability to s in hot state	%(m/m)	3	
Cone penetration at 25 Heat	1/10 mm	40 to 90	prEN 1380
stability: -Max. variation of con penetration value	%	25	prEN 1380
Flow length, 60 °C /5 h maximum	mm	5	
Resistance to overheati -maximum variation in P - maximum length offlo	°C mm	10 5	
Testing Hermanu, height 500	-	without damage fo out of 4	
Maximum stability of subjected to heat	deformation	6,5	
Minimum elasticity an according to Rabe	mm	5	

Figure 20 - Quality requirements for joint sealing bituminous compound

10.3 EPOXY RESIN

The epoxy resin must not contain solvents and fillers, it must be of low viscosity, resistant to high temperatures and compliant with requirements contained in Table below.

Property	Unit of measure	Requiremen	Test meth
Maximum viscosity at 12	mPa s	4000	EN ISO 32
Maximum remainder after ign	% (m/m)	1	EN ISO 3451
Minimum mixing and treatmen	min	10	
Hardening: -minimum hardness after 7 d -maximum hardening time climate -hardening relative air humidity, max	 - h h	 60 18 40	
Minimum content of substances	% (m/m)	98	
Maximum water absorption state, Section 3.2.8	% (m/m)	2,5	

Table 98 - Quality requirements for epoxy resin

In addition to requirements specified in Table abovr the reactive epoxy resin must be resistant to moisture as specified in TP-BEL-EP (Section 3.2.5), and also to high temperatures as specified in TP-BEL-EP (Section 3.3.3).

The usability of reactive epoxy resin in case of "green" concrete is proved by testing according to TP-BEL-EP (Section 3.4).

For product identification purposes, the manufacturer is required to submit the following information about properties of each component contained in the reactive epoxy resin:

- *density determined according to EN ISO 2811-1,*
- *infrared spectral analysis according to DIN 51451,*
- *thermogravimetric analysis according to TP-BEL-EP, Section 3.1.4.*

In addition, the manufacturer or the supplier must provide all relevant information related to use (mark of the product, number of contingent and date of production, proportion of individual components, required quantity of material, treatment time, minimum allowable waiting time for bituminous strip placing).

Sand for spreading

Sand for spreading and treatment with epoxy resin must be quartz sand the quality of which must be compliant with requirements given in Tablebelow.

The sand sampling will be carried out according to EN 932-1, and the sample will be prepared for testing according to EN 932-2.

Property	*Unit of measure*	*Requirement*	*Test method*
Grading 0,1/0,8 mm: *- max. content of grains < 0,063 mm* *- max. undersize* *- max oversize*	 *%(m/m)* *%(m/m)* *%(m/m)*	 *0.5* *5* *10*	EN 933-1
Grading 0,5/1,2 mm: *- max. content of grains < 0,063 mm* *- max. undersize* *- max oversize*	 *%(m/m)* *%(m/m)* *%(m/m)*	 *0.3* *5* *10*	

Table 99 - Quality requirements for quartz sand

10.4 BITUMINOUS SEALING COMPOUND

Properties of oxidized bitumen, i.e. of bitumen compound that is used for gluing bituminous strips according to hot process, must be compliant with requirements.

Property	*Unit of measure*	*Requirement*	*Test method*
Filler content	*%(m/m)*	*0*	
Maximum ash content	*%(m/m)*	*1*	
Bitumen mass softening point, minimum	*°C*	*90*	*EN 1427*
Breaking point acc. to Fraass, maximum	*°C*	*- 10*	*EN 12593*
Penetration	*1/10 mm*	*20 to 30*	*EN 1426*
Shear strength at 50°C, minimum	*N/mm²*	*0,07*	

Table 100 - Quality requirements for bituminous sealing compound

The bituminous sealing compound shall be heated in boilers with indirect heating only.

Instructions given by the bitumen compound manufacturer with respect to the optimum and maximum allowable heating temperatures must be respected.

10.5 BITUMINOUS STRIPS

Elastomeric or plastomeric polymer-based bituminous strips, with either polyester felt or glass fiber insert, shall be used for the preparation of sealing layers.

These bituminous strips shall be placed in the sealing layer either by welding or gluing.

The top side of the polymer-based bituminous strip for welding is covered with talc or with fine mineral chips, and the bottom side with talc or foil.

In case of bituminous strips for gluing, the top and bottom sides are covered with talc or fine mineral chips.

The bituminous strip must be homogeneous, of uniform thickness, without wrinkles and free of any sign of damage.

Properties of polymer-based bituminous strips for welding, with a polyester felt insert, must be compliant with quality requirements.

10.5.1 GENERAL QUALITY REQUIREMENTS FOR POLYMER-BASED BITUMINOUS STRIPS FOR WELDING WITH A POLYESTER-FELT INSERT

** when protective layer is made of rolled asphalt.*
*** refers to originally used insert*

Property	*Unit of measure*	*Requirement*		*Test method*
		4 mm	*5 mm*	
Strip thickness, at no point less than	*mm*	*3,6*	*4,5*	*EN 1849-1*
Minimum thickness of bitumen layer below insert	*mm*	*1,8*	*3,0*	
Bitumen content, minimum	*g/m²*	*3200*	*4200*	

Table 101 - Quality requirements for bituminous strips with glass fiber inserts, as related to placing method, welding or gluing.

In addition to data shown in Table above the manufacturer or supplier must provide at least the following information:

- *designation of the product,*
- *number of contingent and date of production,*
- *total mass of bituminous strip per unit area,*
- *total bitumen content per unit area,*
- *type of polymer,*
- *type of filler in bitumen mass,*
- *mass per unit area of raw, non-impregnated insert,*
- *maximum tensile force of insert,*
- *elongation of insert at maximum tensile force,*
- *width and length of bituminous strip.*

10.5.2 QUALITY REQUIREMENTS FOR MATERIALS

The epoxy resin must not contain solvents and fillers, it must be of low viscosity, resistant to high temperatures and compliant with quality requirements contained.

The first bituminous strip is elastomeric or plastomeric with the glass fiber insert
3.5 mm in nominal thickness when it is glued, or 4 mm in nominal thickness when it is welded. It must comply with quality requirements specified.

The second bituminous strip is elastomeric or plastomeric with the polyester felt insert 4 mm in nominal thickness. It must comply with quality requirements specified in Tables above.

The grain size distribution of asphaltic concrete shall be compliant these General Technical Requirements, but the bitumen content must be adjusted in such a way that the voids content of the standard test specimen according to Marshall is situated within 3.5 to 4.5 % (V/V).

The grain size distribution for the split mastic asphalt must be compliant with these General Technical Requirements, but the content of bitumen and other additions must be adjusted in such a way that the voids content of the standard test specimen according to Marshall is situated within 2.0 to 4.0 % (V/V).

The compaction level of the finished protective layer must not be below 98 percent, and the voids content shall be up to 6.5 percent (V/V) in case of asphaltic concrete, or 6.0 percent (V/V) in case of split mastic asphalt.

10.6 SEALING LAYER

Prior to placing, the sealing strip shall be fully unrolled and accurately place in its position, and then tightly rolled onto the hard roller at least 80 mm in diameter. The bituminous strip prepared in such a way shall be welded or glued.

The hot bituminous mass for gluing shall be poured onto the fully dried bituminous coating, and the bituminous strip shall be pressed onto this mass in such a way that all air accumulated under the strip is

removed. The bituminous mass pressed out in the process shall be smoothened, and the surplus shall be removed.

The bituminous mass for gluing shall be indirectly heated in boilers equipped with devices for continuous mixing and temperature control. Repeated heating of the compound shall not be allowed. Manufacturer's instructions as to heating of the bituminous mass must fully be respected.
In case when the first strip is welded, the foundation layer shall be made of reactive resin. The bituminous strip shall be welded with a number of burners which ensure that the strip is uniformly heated along its entire width. An uniform layer of bituminous mass must flow from the bituminous strip which has been uniformly unrolled. At that, care should be taken to avoid any unnecessary

overheating of the foundation layer and to prevent ignition of the bituminous mass of the sealing strip. The use of individual burners may be allowed only in case of repair or when smaller surfaces are treated.

In the course of welding, the bituminous strip shall be lightly and uniformly pressed onto the surface, and any excess of the bituminous mass has to be removed.

Bituminous strips may be placed either parallel to or perpendicular with the axis of the structure, starting from lower point and progressing towards the higher point.

Longitudinal edges of the strip must overlap by at least 8 cm, and the transverse by 10 cm. Transverse joints must be spaced at no less than 50 cm intervals.

The sealing layer must completely adhere to the foundation layer.

An average strength of the bond must be at least 0.8 N/mm^2, while strength at individual points most not be less than 0.4 N/mm^2.

Prior to the placing of the second bituminous strip, the first layer must thoroughly be examined and any damage noted during such examination must be repaired.

The second bituminous strip of the sealing layer shall be welded onto the first strip in the way similar to that described for the single-layer waterproofing .

Longitudinal and transverse joints must be placed at least 30 cm away from joints in the first layer.

During realization of the sealing layer, a special attention must be paid to zones where openings are situated (water inlets, etc.).

No motor vehicle shall be allowed to pass over the sealing layer.

The sealing layer may be left unprotected for no more than five days.

10.7 PROTECTIVE LAYER

Before the protective layer is placed, the sealing layer must thoroughly be examined and all damage must be repaired. If local damage such as bubbles is noted in the sealing layer, the bubbles shall be cut, sealed once again and a new bituminous strip shall be welded above the repaired zone.

The protective layer of rolled asphalt shall be placed continuously with wheeled paver in order to avoid any damage to the sealing layer, and care mast be taken not to overheat this sealing layer. For that reason, the paver is not allowed to stop and wait for the asphalt mix delivery and unloading. The driving speed of the paver must not be less than 2 m/min and the temperature of the asphalt mix must not exceed 160°*C.*

A poured asphalt strip must be realized next to curbs and expansion joints. Contacts between the poured asphalt joint and curb, expansion joints and rolled asphalt must properly be sealed.

An average bonding strength at the contact between the protective layer and the bedding must be no less than 1 N/mm^2, and individual values must not be lower than 0.7 N/mm^2.

The maximum unevenness of the completed protective layer, as measured with the straightedge 4 m in length, must not exceed 6 mm.

During realization of the protective layer, a bituminous sealing strip must be placed next to curbs so that a good contact can be achieved between the protective layer and the concrete curb.

Vehicles shall not be allowed to pass over the protective layer, except for site vehicles which shall be allowed such passage but only in exceptional cases.

10.8 QUALITY CONTROL

Prior to commencement of the waterproofing work, the Contractor is required to obtain evidence about acceptability of all materials, and shall submit such evidence for the approval of the Supervising Engineer at least 20 days before the commencement of the work.

Activities due to take place before commencement of the work and relating to the preliminary acceptability testing for materials, preliminary job-mix formula and confirmed job-mix formula, shall be carried out in accordance with these General Technical Requirements.

10.9 CONTROL TESTS

Control tests for materials and realization of the single-layer waterproofing, shall be performed by the Contractor. The Contractor is required to submit control test results to the Supervising Engineer within 24 hours following completion of the tests.

Samples shall be taken at the location of the works.

The control tests for components of poured asphalt shall be conducted as specified in these General Technical Requirements.

The composition and physico-mechanical properties of the asphaltic concrete mix or split mastic asphalt mix, and the completed protective layer, shall be tested in accordance with these General Technical Requirements.

10.10 AUDIT TESTS

The audit testing for materials used in the realization of the two-layered waterproofing work shall be conducted in accordance with this GTR.

Test samples of materials shall be taken at the place of production or installation.

The composition and physico-mechanical properties of the asphaltic concrete mix or split mastic asphalt mix, and the completed protective layer, shall be tested in accordance with these General Technical Requirements.

10.11 QUALITY EVALUATION

The two-layered waterproofing is evaluated and approved by the Supervising Engineer based on results obtained during control and audit testing as performed on the completed foundation layer, sealing layer and protective layer.

The foundation layer may be approved if epoxy resin properties are compliant with requirementsand if the strength of the bond with concrete bedding complies with specified values.

The foundation layer may be approved if properties of the bituminous coating comply with requirements.

The first part of the sealing layer made of polymer-based bituminous strip with glass fiber insert may be approved if properties of the bituminous strip comply with requirements specified in Table 7-01.9-9, and if the strength of bond with the foundation layer is compliant with the prescribed value.

The second part of the sealing layer made of polymer-based bituminous strip with polyester felt insert may be approved if properties of the bituminous strip comply with requirements specified in Tables 7-01.9-7 and 7-01.9-8, and if the strength of bond with the first sealing layer is compliant with the prescribed value.

The protective asphaltic-concrete layer may be accepted if the composition of the asphalt mix is compliant with requirements of these GTR, and if physico-mechanical properties are in accordance with of these General Technical Requirements. The voids content in the asphalt mix must be situated within 3.5 and 4.5 percent (V/V).

The compaction level must be at least 98 percent, and the content of voids in the completed layer shall not exceed 6.5 percent (V/V).

The protective layer made of split mastic asphalt may be accepted if the composition of the asphalt mix is compliant with requirements given in these GTR. The voids content in the asphalt mix must be situated within 2 and 4 percent (V/V).

The compaction level must be at least 98 percent, and the content of voids in the completed layer shall not exceed 6.0 percent (V/V).

All cases of non compliance with the above requirements shall be remedied by the Contractor at his own expense, including also all additional testing and measurements as required to establish whether rectification or repair is necessary.

10.12 CALCULATION OF WORK

The quantity of work shall be measured per square meter of really placed and installed two-layered waterproofing, which includes preparation of the bedding and placing of the foundation layer, sealing layer and protective layer.

Works related to the sealing of joints shall be calculated separately per linear meter. The price includes all costs relating to the supply of material, production *and placing of asphalt mix, transport, equipment and everything else that is* needed for realization of the work.

11. METALLIC PROTECTION

The corrosion protection with metal is usually performed by galvanizing or metallization.

The hot galvanizing process is usually applied in case of elements that can be submerged into an appropriate melted zinc bath. The galvanizing must be uniform, without accumulation of zinc foam. At that, no surface shall be left untreated. The zinc layer thickness shall be defined as specified in EN ISO 1461.

In aggressive environment, the protection by galvanizing may additionally be improved by organic coatings (duplex systems).

The metallization is the process of spraying the steel element with melted metal (zinc, aluminum, lead) using special spraying guns. The minimum thickness of such protection shall be specified in the design based on the type of structure and conditions in which it will be used, but always in accordance with applicable regulations. This protection will be applied onto the steel element surface that has been properly cleaned by sanding no later than 4 hours after such preparation).

This protection shall not be applied during rain or in misty weather, or when relative humidity of air is higher than 80 percent. If necessary, this type of protection by metals may additionally be improved with organic coatings.

11.1 SURFACE PREPARATION

The procedure for preparing surface of elements to be protected against corrosion shall be conducted in accordance with applicable regulations as specified in the design.

The surface of new steel elements shall be prepared using one or several of the following procedures:

- *degreasing,*
- *mechanical cleaning (manual or by machine using rotating brushes),*
- *sanding or pelleting,*
- *brazing (by oxyacetylene),*
- *chemical treatment.*

The cleaned surface should be dusted either by vacuum cleaner or by jet of dry air. The quality level of cleaned surface shall be specified by the Designer, depending on the conditions of use and the protection system selected.

The surface of steel elements whose anticorrosive protection is damaged or degraded, shall be prepared using one or several of the following procedures:

- *mechanical cleaning (manual or by machine using rotating brushes),*
- *sanding or pelleting,*
- *brazing (manual or mechanical when more than 20% of the surface is affected by corrosion),*
- *chemical treatment.*

For elements on which damage to anticorrosive protection is of local character, the cleaning shall be performed on the affected surfaces only.

Old anticorrosive coatings that have lost their elasticity and gloss may be activated by roughening them with sandpaper in two perpendicular directions and by sanding or chemical activation, and then by adding new anticorrosive coats.

11.2 REALIZATION OF PROTECTIVE COATS

The prime coat is usually applied already in the Contractor's workshop (during preparation of steel elements).

Each coat may be applied only after the preceding coat has fully "dried", i.e. until its thickness has been checked and until it has been inspected and approved by the Supervising Engineer.

Coats applied after the prime coat (except the final coat) may also be applied in the factory (workshop) if this has been approved by the Designer and the Supervising Engineer. Protective coats must be dry (hard) during transport.

The drying time of individual coats and application time for next coats is normally specified by the protective coating manufacturer. These and other manufacturer's instructions must strictly be respected.

In case the prime coat and final coats are not produced by the same manufacturer, the compatibility of these coats will have to be tested and proven prior to their use.

The following minimum thicknesses (in microns) shall be applied for anticorrosive protection of various steel elements:

Pedestrian railings:

coated surfaces	*120*
galvanized surfaces	*EN ISO 1461*

Protective nets on overpasses:

coated sheet metal and angle sections	*120*

coated nets	*60*
galvanized sheet metals and angle sections	*EN ISO 1461*
galvanized nets	EN ISO 1461
Traffic signs	
galvanized posts	*EN ISO 1461*
galvanized portals	*EN ISO 1461*
Steel barriers	
galvanized envelope	*EN ISO 1461*
galvanized posts	*EN ISO 1461*
galvanized spacers	*EN ISO 1461*
Safety fences	
galvanized posts	*EN ISO 1461*
galvanized nets	*EN ISO 1461*
Lighting poles	
coated envelope	*120*
coated bottom part of the envelope (up to 1 m in height)	*160-240*
galvanized envelope	*EN ISO 1461*
Load bearing steel structures of toll booths	120
Other equipment specified in the design	*(galvanized according to EN ISO 1461)*
Galvanized nets for the protection of slopes and cuttings	*EN ISO 1461*

11.3 Control testing and determination of compliance

Quality of corrosion protection work and materials used in corrosion protection shall be checked in the scope of control tests performed by the Contractor and also in the scope of checking compliance of realized work with requirements specified in the design and applicable regulations. This compliance checking is performed by an authorized institution.

12. SHEAR CONNECTORS

In case of transverse joints, the transfer of load, the same vertical positioning and joint behavior of concrete slabs in the zones of expansion joints is ensured by shear connectors, while displacement of longitudinal joints is prevented with anchors.

The number, size and positioning of shear connectors and anchors shall be specified in the concrete pavement design.

Shear connectors are usually made of smooth concrete reinforcement.(round steel bars). They are spaced at 30 cm intervals in the center of the cross section. The half length of shear connector +3 cm is coated with bitumen or some other synthetic material which prevents concrete and shear connectors from adhering to one another. They are placed in such a way that the coated half of the shear connection is alternately in one and the other slab.

Anchors are usually made of deformed reinforcement (rebars) and are not coated.

12.1 REINFORCEMENT

If the concrete pavement has to be reinforced either because the underlying soil is weak and nonhomogeneous, or because the slab length exceeds 25 slab thicknesses, or if such decision is made for any other reason, the reinforcement method, compliant with EN 10080, shall be specified in the concrete pavement design. The reinforcement may be either single (in top third of the cross section) or double (in the top and bottom zones). For normal reinforcement, the steel fabric must be placed in such a way that the top reinforcement is 7 cm below the concrete surface and the bottom one 3 cm above the bottom edge of the slab. The diameter of wires of which the steel fabric is formed must be smaller than 5 mm. The spacing between longitudinal bars must not be greater than 15 cm and, in case of transverse bars, such spacing should not exceed 30 cm.

If the design calls for realization of the reinforced concrete pavement of continuous type, the reinforcement shall be dimensioned in the design in such a way that the local appearance of shrinkage cracks is limited to very fine cracks spaced at small intervals, which do not affect durability of the pavement structure nor do they influence quality of driving on concrete pavement. The reinforcement shall be deformed reinforcement (rebars) complying with EN 10080.

12.2 CONSTRUCTION

The concrete pavement shall be realized in accordance with applicable regulations and these General Technical Requirements by a team of qualified and experienced workers headed by a highly skilled foreman. An appropriate and efficient high-frequency paving equipment has to be equipped with tools suitable for every stage of work, from spreading and compaction to final treatment, protection and cutting of expansion joints. Individual phases of final treatment shall be planned in an optimum manner and realized within the scheduled deadlines.

Excessively long transport of concrete from the batching plant to the location where the concrete will be placed, should be avoided. Allowable waiting time of concrete (time from production to placing) shall be

determined in advance by experiment, taking into account concrete temperature, ambient temperature, and the type of cement and chemical admixtures used.

If the top portion of transverse joints is made by cutting joints in the hardened concrete, then an optimum time for such cutting shall be determined by experiment, depending on actual on-site conditions. The cutting shall normally be performed as soon as practicable, i.e. as soon as the concrete has sufficiently hardened, so as not to damage the edges. In general, this could be performed between 12 and 20 hours after concrete placing, at air temperature of about 15°C*, or between 8 to 14 hours after placing at air temperature of about 30°C.*

The freshly placed concrete shall be protected against evaporation as soon as the concrete surface allows such protection. The concrete shall be protected for at least 14 days after placing. The protection of concrete against direct influence of sun and wind, and against low temperatures, shall commence immediately after concrete placing.

In the beginning of cure, the concrete shall be covered, as soon as allowed by the concrete surface, by moisture-preserving material, and such material shall be kept in place throughout the curing time.

Chemical substances applied in the protection of concrete shall be tested prior to use, and their efficiency shall be proven in actual on-site conditions. The moisture of concrete shall be checked with isotopes throughout the curing time. If it is determined that the efficiency of the substance used is not appropriate, then a suitable wet curing procedure shall immediately be initiated.

Chemical substances shall be finely dispersed and uniformly applied onto the concrete surface. They should be of light color so as not to absorb the sun heat. They should in no event be harmful to concrete.

The evenness of pavement surface in longitudinal direction shall continuously be measured on individual lanes by the goniometer or straightedge 4 m in length. When straightedge is used, every next measurement shall overlap with the

preceding one by 2 m. One lane is deemed to be the width between two longitudinal connections. During acceptance of marginal strips, the evenness is measured at the distance of approximately one meter from the right edge of the marginal strip in the direction of driving, and for driving lanes the evenness is measured in the center of the lane, in longitudinal direction. The evenness of concrete pavement shall be within tolerances specified.

Table 7-02.6-1 *Evenness tolerances for concrete pavement*

Traffic load forecast	*Allowable deviations (tolerances)*		
	evenness mm	*height mm*	*straight line mm*
Very high, high and moderate	*4*	*20*	*30*
High	*6*	*40*	*50*
Other	*6*	*40*	*100*

Unless otherwise specified in the design, an uneven surface is the surface defined in the transverse direction by lane width, and in longitudinal direction by length on which the unevenness higher than allowed has been observed, as increased by 3 m on both sides.

If the distance between two adjacent zones not complying with evenness tolerances is less than 6 m, then the length of the noncompliant uneven surface shall be calculated continuously. Deviations form design levels and lines shall be measured by topographic instruments along the center of individual lanes at every 15 m. The zone covered by one measurement is defined by the width of the lane and half distance to neighboring measurements counted from both sides of the spot on which the measurement is made.

The allowable evenness tolerance shall in no case result in noticeable unevenness nor in improper evacuation of water from the pavement.

Prior to realization of road marking, the chemical protection shall be fully removed from concrete surface. If chemical protection of pavement surface is also applied for the protection of concrete at joints cut into concrete pavement, then such protection should be selected in such a way that it does not negatively affect adhesion properties of the joint sealing compound.

Already in early period of cure, the placed concrete shall be protected against mechanical damage and, in that respect, separate treatment will be applied for edges and joints. Lighter vehicles shall be allowed to pass over concrete pavement when at least 70 percent of strength has been reached for the required class of concrete, while heavy vehicle traffic (full load) shall be allowed only after full strength has been reached for the required class of concrete.

No load shall be imposed on the completed pavement surface unless approved by the Supervising Engineer.

The salt used for concrete pavement maintenance in winter conditions shall be applied only after it has been firmly established that the concrete has reached an appropriate resistance to such highly aggressive action. To be on the side of safety, salt shall be used not earlier that 90 days after concrete placing. Until that *time, the concrete pavement surface shall be maintained by snow clearing and by* spreading an appropriate sprinkling material.

13. DAMAGE OF CONCRETE

13.1 CRACKS

Separate solutions should be provided in case of damage by cracking, regardless of whether it occurs in aggressive or non-aggressive environment. It is first of all necessary to determine the cause of cracking, which may be:

- *plastic and early shrinkage of concrete,*
- *shrinkage of concrete by drying and carbonization (subsequent action),*
- *temperature gradients in the course of hardening,*
- *temperature variations during use,*
- *static load,*
- *dynamic load.*

After that, the geometry of the crack shall be determined (depth, length and width of the crack) and the repair solution shall be devised taking into account the crack width and aggressiveness of the environment. In chemically aggressive environment, all cracks more than 0.1 mm in width shall be repaired, while in environment where corrosion is stimulated by chlorides all cracks (even those less than 0.1 mm in width) shall be treated, i.e. coated with durable plastic polymer-cement coating or impregnated with silanes. Cracks more than 0.3 m in width shall be repaired in all conditions and on all structures.

Cracks that "do not work" should be repaired by grouting them with epoxy resin, while cracks that "work" (expansion cracks that are subject to variable load, etc.) should be repaired with durable plastic putty. In highly sensitive situations, cracks must also be grouted (with rigid or permanently plastic substances) and their surface should be treated with putty.

13.2 DAMAGE OF CONCRETE BY FREEZING ACTION

The concrete severely affected by freezing shall be replaced with new concrete, and the concrete affected by surface peeling shall be removed down to hard and sound layers, meeting to following requirements:

- *breaking resistance in excess of 1.5 N/mm^2,*
- *resistance to freezing after exposure to at least 50 freeze-thaw cycles if not saturated with moisture after repair,*
- *resistance to at least 100 freeze-thaw cycles if saturated with moisture after repair.*

The protection system selected must in any case properly adhere to the underlying concrete, i.e. the adhesion should be at least 1.5 N/mm^2, and must withstand at least 100 freeze-thaw cycles.

13.3 DAMAGE OF CONCRETE BY FREEZING AND DEICING SALT

Damaged surface layer of concrete shall be removed down to the level meeting resistance criteria as specified in the preceding case.

The protection system used must be made hydrophobic and shall be resistant to freezing and deicing salt when subjected to at least 50 cycles of freezing and deicing salt.

13.4 ABRASIVE DAMAGE TO CONCRETE

In general terms, abrasive damage to concrete is a surface occurrence only. The abrasive action mostly affects and removes the surface layer of concrete, while underlying layers are not affected (until reached by erosion).

Repair systems must be applied onto the properly prepared natural and roughly leveled surface of the remaining concrete. The edges must be cut transversely to the direction of abrasive action down to the depth appropriate for the type and thickness of the repair system applied, i.e. appropriate for its application and for the surface leveling to the prescribed evenness and smoothness values.

The repair system used must be resistant to the specified type and strength of erosive action, as evidenced by an appropriate document. In most cases, it consists of the fiber-reinforced fine-grained and highly adhesive concrete of high quality, which is obtained by fiber reinforcement and by adding superplasticizers and silica fume.

13.5 CORROSION OF CONCRETE

The problems of determining condition of concrete affected by corrosion and finding solution to such damage are everything but simple. It is first of all necessary to define the type of aggressiveness, the way in which the corrosion progresses, the level of penetration (concentration) of aggressive substances by depth, and the physico-mechanical condition of concrete itself (for concrete affected by corrosion as well as for the unaffected concrete).

The degraded portion of concrete shall be removed to the level at which the concentration of aggressive substances is acceptable (allowable), i.e. to the level where physico-mechanical condition of concrete is compliant with the repair design.

The repair system, most often based on polymers or polymer-cement, must be proven to be resistant to the identified type of chemical aggressive action, it must be sufficiently impermeable, mechanically hard and, finally, it must properly adhere to the underlying concrete.

13.6 STANDARDS AND TECHNICAL REGULATIONS

An overview of general and special regulations applied in the field of road and motorway construction is given in Volume I of these General Technical Requirements. The following standards, as referred to in appropriate sections of the present Volume of the General Technical Requirements, are therefore related only to concrete structures and construction with concrete.

ENV 1992.	*Eurocode 2 - Design of concrete structures.*
ENV 1994	*Eurocode 4 - Design of composite steel and concrete* structures.
ENV 1998	*Eurocode 8 - Design provisions for earthquake resistance* of structures.
EN 206	*Concrete - performance, production, placing and* compliance criteria.
ENV 13670	*Execution of concrete structures.*
EN 1504	*Products and systems for the protection and repair of* concrete structures.
EN 196	*Methods of testing cement - Chemical analysis of cement.*
EN 197	*Cement - Composition, specifications and conformity* criteria for common cements.
EN 12620	*Aggregates for concrete*
EN 13055	*Lightweight aggregates*
EN 933	*Tests for geometrical properties of aggregates*
EN 1097	*Tests for mechanical and physical properties of aggregates* EN
1008	Mixing water for concrete
EN 10080	*Steel for the reinforcement of concrete*
EN 10138	Steel for the prestressing of concrete
EN 523	*Steel strip sheathes for prestressing tendons* EN
934	Admixtures for concrete, mortar and grout EN
450	Fly ash for concrete
EN 13263	*Silica fume for concrete*
EN 446	*Grout for prestressing tendons - Grouting procedures*
EN 447	*Grout for prestressing tendons - Specification for common* grout
ENV 13670	*Execution of concrete structures*
EN 12350	Testing fresh concrete.
EN 12390	*Testing hardened concrete*
DIN 18191:1980	*Woven glass fabric as inlay bituminous sheeting*
DIN 18192:1985	*Bonded polyester fleece used as an inlay for bitumen and* polymer bitumen sheeting: concept, designation, requirements, testing.
DIN 1996-16:1975	*Testing of bituminous materials for road building and* related purposes; Determination of segregation tendency.
DIN 51451:1988	*Testing of petroleum products and related products:* analysis by infrared spectrometry: general working principles.
DIN 51755:1974	*Testing of mineral oils and other combustible liquids;* Determination of flash point by the closed tester according to Abel-Pensky.

DIN 52005:1980	*Testing of bituminous binders; determination of ash.*
DIN 52123:1985	*Testing of bitumen and polymer bitumen sheeting and felts.*
DIN 52141:1980	*Glass fiber fleece as layer for roof and water-proof* sheeting; definition, designation, requirements.
DIN 52142:1978	*Glass fiber mat as carrier material for roll roofing and* waterproofing; test procedures.
DIN 53150:1995	*Paints and varnishes - Determination of the drying stage of* coatings.

DIN 53215:1998	*Bitumen and bituminous binders - Determination of the* non-volatile matter content of bituminous coating materials.
EN 932-1:1996	*Tests for general properties of aggregates - Part I:Methods* for sampling.
EN 932-2:1999	*Tests for general properties of aggregates - Part 2:* Methods for reducing laboratory samples.
EN 933-1:1997	*Tests for geometrical properties of aggregates - Part 1:* Determination of particle size distribution - Sieving method.
EN ISO 2811-1:2001	*Paints and varnishes - Determination of density - Part 1:* Pyknometer method.
EN ISO 3219:1994	*Plastics - Polymers/resins in the liquid state or as* emulsions or dispersions - Determination of viscosity using a rotational viscometer with defined shear rate.
EN ISO 3451-1:1997	*Plastics - Determination of ash - Part I: General methods.*
EN 1849-1:2002	*Flexible sheets for waterproofing - Determination of length,* width and straightness. Part 1: Bitumen sheets for roof waterproofing.
EN ISO 2431:1999	*Paints and varnishes - Determination of flow time by* use of flow cups.
prEN 13880-2:2000	*Hot applied joint sealants - Tests methods - Part 2:* Determination of cone penetration at 25 *C.*
prEN 13880-4:2000	*Hot applied joint sealants - Tests methods - Part 4:* Determination of
EN ISO 1461	*Hot dip galvanized coatings on fabricated iron and steel* articles - Specifications and test methods.
ASTM 123	*Standard specification for zinc (hot dip galvanized. Coatings on iron and steel products.*

14. ROAD FURNITURES

14.1 GENERAL REMARKS

This section sets general requirements for the realization of works and specifies minimum quality requirements for materials, products and works as applied during realization of works relating to road furniture. The GTR are written in such a way that they form a part of the contract while requirements relating to special works are included in the contract as Special Technical Requirements (STR).

Materials, products, equipment and works must comply with the standards and technical regulations specified in the design documentation. If no standard is specified, then an appropriate EN (European standard) must be applied. If a standard or regulation becomes invalid during realization of the project, it will be substituted by an appropriate replacement standard or regulation.

The Contractor may propose application of generally recognized technical rules (standards) issued by a foreign standardization body (such as ISO, EN, DIN, ASTM, etc.), subject to written explanation and approval of the Supervising Engineer. This change may be accepted by the Supervising Engineer if approved by the Designer. The Contractor is required to register this change in the working design.

14.2 DEFINITIONS

General terms and expressions, with the meanings they have in these General Technical Requirements, are presented in section 1. The following terms are additional terms that are especially relevant to this section.

Automatic traffic counter *is a device for constant traffic information collection.*

Road weather station is a device for constant information collection on weather conditions relevant for traffic.

Road markings across the road *are lines marked vertical or sloped to the road centreline.*

Traffic signs are elements of horizontal and vertical signalization which guide and inform the drivers about the manner of behaviour on roads.

Marker post is a post which indicates the nearness of road edge.

Noise protection device is a construction – engineering structure which decreases the traffic noise to an insignificant level.

Anti -glare screen is a construction – engineering structure which prevents the blinding of drivers by traffic from the opposite direction.

Road markings along the road *are lines marked parallel to the road centreline.*

Safety barrier is an engineering safety structure that prevents the skidding of vehicles from the road surface, i.e. catches and holds the vehicles turned aside.

Safety chain-link fence is an element which protects the motorway surface (road area) from unwanted entries and enables safe traffic flow.

14.3 TRAFFIC SIGNS (VERTICAL AND HORIZONTAL SIGNS)

Description of work

This work includes the supply and installation of all types of traffic signs, all in compliance with the traffic road furniture design.

The work shall be executed in accordance with the design, the Book of Rules, regulations, the quality assurance and control programme (QAACP), the construction- management design (CMD), the supervising engineer's requests and these General Technical Conditions.

This work consists of installing and removing and resetting permanent traffic control devices.

Sign panels are designated as plywood (temporary only), steel, aluminium, plastic, fiberglass reinforced plastic, or extruded aluminium.

Sign posts are designated as wood (temporary only), aluminium, galvanized steel, or corrosion resistant steel.

Kilometric mileage stones are of metallic type and retroflective sheeting, installed along the median.

The origin of the kilometer count will be fixed by the Engineer. Contractor is responsible for accurately surveying the centerline distance in order to locate the markers.

14.3.1 SHAPE AND DIMENSIONS OF TRAFFIC SIGNS

Traffic signs, according to type, meaning, shape, colour, size and manner of installation must be in compliance with European standards:

ES 12899-1,
ES 12899-2,
ES 12996,
ES 12352,
ES 12368,
ES 12675,
ES 1436,
ES 1463,
ES 1790,
ES 1871.

Larger size traffic signs, whose surface area is greater than 2m^2, shall be made of several parts assembled in a unique whole at the place of installation.

The traffic signs shall be placed into position in such a manner that there is no visible connection from the front side. Elements for fixing shall be of such performance which prevents the turning of the traffic sign around the post axis. The screws shall be protected against unscrewing.

Traffic signs shall be placed on posts made of Fe pipes, corrosion protected by means of hot galvanization, or on aluminium posts.

Larger size traffic signs, e.g. direction boards, shall be fixed on aluminium "I" girders by means of pre-fabricated elements. Number of girders depends on the surface area of the traffic sign as given bellow:

- *surface area of the sign up to 8 m^2 – 2 girders IPA1.180 mm*
- *surface area of the sign from 8 m^2 to 15 m^2, 3 girders IPA1, 180 mm or 2 girders IPA1 240 mm*

During installation the traffic sign should be turned 3-5º in relation to the road centreline in order to avoid bright reflection and decrease the contrast of marks, signs and the illuminated background. More than two traffic signs shall not be installed on one post.

The traffic sign posts are placed into concrete foundations, minimum concrete class C 20/25 (MB 25), of a truncated pyramid shape, whose lower square sides are 30 cm and upper square sides are 20 cm.

14.3.2 MATERIAL

Conform to the Signs and Marking Manual and the following Section and Subsections:

14.3.3 CONSTRUCTION REQUIREMENTS

General. Furnish and install permanent traffic control devices according to the Signs and Marking Manual and permanent traffic control plans. Provide traffic control devices that are crashworthy.

Sign locations may be changed to fit field conditions as approved by the Engineer. Determine sign support lengths at time of staking.

Sign Posts. Install sign posts plumb and according to the manufacturer's recommendations.

Drive sign posts with a suitable driving head or set posts in drilled or punched holes.

14.3.4 SIGN PANELS

(1) Panels. Cut panels to dimension shown and place holes before applying retro reflective material. Do not field drill holes in panels.

Clean and degrease the face of the metal panels using methods recommended by the retro reflective sheeting manufacturer before applying retro reflective sheeting.

Wipe plastic panels clean with a slightly dampened cloth before applying retro reflective sheeting.

Abrade, clean, and degrease the face of the plywood panels (temporary only) using methods recommended by the retro reflective sheeting manufacturer before applying reflective sheeting. Treat plywood panel edges with sealant.

Join extruded aluminum panel sections with panel nuts, bolts, and washers to achieve the desired sign size. Use 150-millimeter and 300-millimeter plate heights to achieve the sign panel vertical dimensions in increments of 150 millimeters. Do not include more than one 150millimeter plate per sign.

Use retro reflective sheeting as specified and according to ASTM D4956. For roadside signs, use Type III,

IV, VIII, IX, or XI prismatic retro reflective sheeting. Use fluorescent yellow sheeting for warning temporary signs. Use fluorescent sheeting of color in accordance with local rules and regulations for pedestrian, bicycle, and school crossing signs.

For multilane or overhead guide signs, use Type III or IV prismatic retro reflective sheeting for the background and Type IX or XI retro reflective sheeting for the legend.

For parking lot and non-roadway signs, Types I and II retro reflective sheeting may be used.

(2) Legends and Borders. Form letters, numerals, and other units to provide a continuous stroke width with smooth edges. Make the surface flat and free of warp, blisters, wrinkles, burrs, and splinters. Do not fabricate letters, numerals, arrows, symbols, or borders using a red screen ink process.

Conform to one of the following techniques:

(a) Type L-1 (screen process). Apply letters, numerals, arrows, symbols, borders, and other features on the sign background by direct or reverse screen process. Apply messages and borders of a color darker than the sign background by the direct process. Apply messages and borders of a color lighter than the sign background by the reverse screen process.

Apply screen inks recommended by the ink manufacturer for use on the various types of retro reflective sheeting. Apply ink that has the same durability and color as specified for that type of retro reflective sheeting. Apply black screen ink until opaque on retro reflective sheeting.

Perform the screening in a manner to ensure a uniform color and tone, with sharply defined edges of legends and borders. Do not allow running, streaking, or sagging.

Air dry or bake the signs after screening according to manufacturer's recommendations to provide a smooth hard finish.

(b) Type L-2 (transparent films). Apply letters, numerals, arrows, symbols, borders, and other features on the sign background with colored transparent films. Select durable, electronically cuttable films coated with a transparent pressure-sensitive adhesive protected by a removable liner. Use transparent films recommended by the manufacturer within the color requirements specified for the retro reflective sheeting.

(c) Type L-3 (direct applied characters). Cut letters, numerals, arrows, symbols, borders, and other features from black opaque or retro reflective sheeting of the color specified. Apply characters to the sign background according to the retro reflective sheeting manufacturer's instructions. Use the same sheeting manufacturer for both the sign legend, border, and background.

Package sign panels in protective material and transport in a vertical position.

(b) Installation. Mount sign panels with the legend horizontal.

Use oversized bolt heads and neoprene or nylon washers for fastening plastic sign panels. Use antitheft fasteners where possible. Paint bolt heads, screw heads, and washers that are exposed on the sign face. Match the color of the paint to the color of the sheeting at the point where the fitting is exposed.

Turn sign panels 3 degrees away from the road in the direction of travel to reduce specular glare (mirror reflection).

Cover the sign face with an opaque material if a sign message is not applicable. Maintain the covering in good condition until the message becomes applicable. Do not use adhesive tape on the sign face.

Delineators and Object Markers. Attach delineators and object markers to posts according to the manufacturer's recommendation or as specified.

Removing and Resetting Permanent Traffic Control Devices. Remove and store existing traffic control devices to be reset as necessary. Replace traffic control devices damaged during removal, storage, and resetting.

14.3.5 ACCEPTANCE

Material for permanent traffic control devices will be evaluated

Installation of permanent traffic control devices will be evaluated.

When measuring sign panels by the square meter, measure front face. Measure each sign panel in a multiple configuration.

When measuring sign systems by the square meter, measure front face of each sign panel.

When measuring sign systems by the each, measure each system as one regardless of the number of sign panels.

A sign system includes the supports.

When measuring removing and resetting permanent traffic control device, measures after they are reset. Measure removing and resetting of sign systems as described above.

14.3.6 PERMANENT PAVEMENT MARKINGS

This work consists of applying paint, markings, and markers on completed pavement.

Pavement markings are designated as follows:

Type A – Solvent borne traffic paint with Type 1 glass beads;

Type B – Waterborne traffic paint with Type 1 glass beads;

Type C – High-build waterborne traffic paint with Types 1 and 3 glass beads;

Type D – Epoxy markings with Type 1 glass beads;

Type E – Epoxy markings with Type 1 and Type 3 glass beads;

Type H – Thermoplastic markings with type 1 glass beads;

Type I – Thermoplastic markings with Type 1 and Type 3 glass beads;

Type J – Preformed pavement marking tape; or

Type K – No reflectorized markings.

2U – Continuous or discontinuous white painted strip 0.12m wide

3U – Continuous or discontinuous white painted strip 0.18m wide

Raised pavement markers are designated as follows:

Type “CR” — “Clear & Red” reflective markers

Type “YY” — Two-way “Yellow” reflective markers

Material Conform to the Signs and Marking Manual.

14.3.7 CONSTRUCTION REQUIREMENTS

General. Where existing and final pavement marking locations are identical, stake the limits of existing pavement markings before beginning pavement work.

Submit manufacturer’s product data sheet at least 7 days before applying pavement markings. A field demonstration may be required to verify the adequacy of the material.

Ship marking material in suitable containers plainly marked with the following information as appropriate for the material being furnished:

(a) Manufacturer’s name and address;

(b) Name of product;

(c) Lot/batch numbers;

(d) Color;

(e) Net mass and volume of contents;

(f) Date of manufacture;

(g) Date of expiration;

(h) Statement of contents (if mixing of components is required);

(i) Mixing proportions and instructions; and

(j) Safety information.

Establish marking patterns or locations according to the Signs and Marking Manual, plans, or state requirements. In curve widening areas, establish the edge line markings at the limits of the traveled way and the centerline markings equal distance between the edge lines.

Remove loose particles, dirt, tar, grease, and other deleterious material from the surface to be marked.

Remove temporary pavement markings the same day permanent pavement markings are applied. Remove temporary and conflicting pavement makings ,before applying permanent pavement markings.

Obtain approval before applying markings. Apply markings to a clean, dry surface, and according to the manufacturer's recommendations. Produce markings that are clean-cut and uniform in appearance by day and night.

Current state approved pavement marking material may be used, when approved by the Engineer. Submit proof of compliance with state specifications.

Apply glass beads immediately following paint or markings application to ensure adhesion.

Protect markings from traffic until dried to a no-tracking condition. Remove tracking marks, spilled marking material, markings in unauthorized areas, and defective markings.

Epoxy Markings (Types D and E). Apply epoxy when pavement and air temperatures are 2 °C and rising. Heat components as specified by the manufacturer. Apply at a 0.63 millimeters minimum dry film thickness or at a rate of 1.7 square meters per liter.

(a) **Type D.** Apply Type 1 glass beads on the epoxy at a rate of 0.72 to 0.96 kilograms per liter of epoxy.

(b) **Type E.** Use two bead dispensers. Apply Type 3 glass beads on the epoxy at a rate of 0.72 to 0.96 kilograms per litre of epoxy followed by Type 1 glass beads on the epoxy at a rate of 0.72 to 0.96 kilograms per litre of epoxy.

Thermoplastic Markings (Type H and I). Apply thermoplastic when pavement and air temperatures are 10 °C) and rising. Heat thermoplastic as specified by the manufacturer.

Apply an epoxy resin primer/sealer according to the thermoplastic manufacturer's recommendations when placing markings on:

- rigid pavements; or
- asphalt pavements more than two years old, oxidized, or have exposed aggregates.

Allow the primer/sealer to dry.

For edge lines, apply thermoplastic at 1.5 millimeters dry film thickness. For other lines, apply thermoplastic at 2.3 millimeters dry film thickness.

(a) **Type H.** Apply Type 1 glass beads on the thermoplastic at a rate recommended by the manufacturer.

(b) **Type I.** Use two bead dispensers. Apply Type 3 glass beads on the thermoplastic followed by Type 1 glass beads on the thermoplastic at rates recommended by the manufacturer.

Pavement Markers. Install raised or recessed pavement markers when the pavement and air temperatures are 10 °C and rising. Apply pavement markers with an adhesive as recommended by the manufacturer when the pavement is dry. Space the markers according to plans.

14.3.8 MEASUREMENTS

Measure the pay items listed in the bid schedule according to the following as applicable:

When pavement markings are measured by the linear meter, measure the length of line applied along the centerline of each line applied regardless of color. Measure broken or dotted pavement lines from end to end of the line including gaps. Measure solid pavement lines from end to end of each continuous line.

When pavement markings are measured by the square meter, measure the number of square meter of line, symbol or letter marking based on the marking area shown in the plans. If not shown, measure the area of each marking in place to the nearest square meter.

14.3.9 PAYMENT

The accepted quantities will be paid at the contract price per unit of measurement for pay items listed in the bid schedule. Payment will be full compensation for the work prescribed in this Section.

14.3.10 QUALITY CONTROL

Materials for production of signs and posts are defined by standards. For all materials used, the Contractor shall at his expense provide certificates of adequate material quality before installation. Original copies of the certificates shall be given to the supervising engineer.

Material quality control and corrosion protection of steel elements shall be carried out in accordance with relevant provisions of these General Technical Conditions.

Protection of electrical and electronic elements of the fire protection system is defined by separate legal provisions relevant for electrical end electronic installations, thus the quality control is performed according to these provisions. The Contractor shall, at his expense, ensure the quality control of material and works and original copies of the certificates shall be given to the supervising engineer.

14.3.11 WARNING SIGNS

Warning signs (equilateral triangle) are fixed on posts of square or circular cross- section.

Dimensions of the signs are defined by the Book of Rules and relevant standards.

The work includes supply, transport and installation of traffic sign with post and foundation included. The price is calculated according to the number of installed signs of particular size, including posts and foundations, taking into consideration the differences of locations according to the number of signs on one post (post with one signs – post with two signs).

14.3.12 REGULATORY SIGNS

Regulatory signs are mostly circular shaped (exceptionally octagon or equilateral triangle shaped) and are fixed on posts of square or circular shaped cross-section.

The work includes supply, transport and installation of traffic sign with post and foundation included. The price is calculated according to the number of installed signs of particular size, including posts and foundations, taking into consideration the difference of locations according to the number of signs on one post (post with one signs – post with two signs).

14.3.13 INFORMATION SIGNS

Information signs are circular, square or rectangular shaped, fixed on posts of square or circular cross-section. Large rectangular shaped signs are fixed on to posts and the exceptionally large ones are fixed on structures that demand special calculation and measurements. During calculation, local weather conditions must be considered (the frequency, force and direction of the wind).

Sign measurements are regulated by the Book of Rules and Standards. Measurements of large and exceptionally large information signs depend on the content, thus they are calculated separately in accordance with the guidelines of the competent road management authorities.

These can be:

- *Signs: one way vehicles from opposite direction, pedestrian crossing sign, children on the road, underground or overhead pedestrian crossing, one way traffic signs,*
- *Signs: overtaking allowed, priority passage road, pedal cyclist route crossing marked,*
- *Signs: end of overtaking restriction, end of speed restriction, end of horn signal restrictions, end of all restrictions sign,*
- *Signs: Speed restriction zone and end of restriction, pedestrian zone and end of pedestrian zone, restricted parking duration zone and end of that zone,*
- *Signs: recommended speed and end of that speed, lights-on sign, lights-off sign, motor off sign,*
- *Signs: school patrol, hospital, ambulance station, police, parking, garage, telephone, information, petrol station, hotel or motel, restaurant, potable water, taxi, bus station, airport, tram station, port, marina, coffee-shop, picnic area, camp, climbers' lodging, fire-fighters, road service vehicle, car workshop, car-wash, toilet, radio-station, river, water-protected area, rest-area, detour for certain type vehicles, traffic sign for certain type of vehicles, traffic lane for certain type of vehicles, traffic lane for closing and detour of traffic.*
- *Signs: road structure (tunnel, viaduct etc.)*
- *Signs: mountain pass, highway – beginning and end, road for motor vehicles only and end of road for motor vehicles only, board indicating exit.*
- *Sign: name of settlement and end of settlement,*
- *Sign: traffic direction sign,*
- *Sign: blind alley / dead end lane*
- *Sign: traffic flow direction, change of lanes, intersection, primary traffic direction sign, primary exit direction board, direction confirmation sign, rest area, toll gate, no entry on highway for certain vehicle categories,*
- *Signs:: Direction sign on gantry, traffic allotment sign on gantry,*
- *Signs: detour direction*
- *Signs: Traffic lane for public transport vehicles and end of lane, traffic sign for speed restriction*

and end of that speed restriction,

- *Signs: traffic direction board*
- *Signs: number of international road, highway, state and county road, state and county road mark, kilometre mark.*

The work includes supply, transport and installation of traffic sign with posts and foundations included. The price is calculated according to the number of installed signs of particular size, including posts and foundations, taking into consideration the differences of locations according to the number of signs on one post (post with one sign – post with two signs), locations of one sign on two posts and locations with a bearing structure.

14.3.14 CHANGEABLE SIGNS

Changeable traffic signs (CTS) are signs whose content can, according to need, be changed or turned off during the traffic flow. With the use of respective applicable warnings, orders or prohibitions for specific traffic or weather situations, as well as information signs on traffic detour, traffic safety and traffic flow should be increased. Special attention shall be given to the construction conditioned dangerous spots. Changeable traffic signs are defined by type, meaning, shape, colour, size and manner of installation and are installed according to the European standards (EN 12966).

Content of an individual sign can be expressed in four states:

- *Zero state – changeable traffic sign without any information*
- *Basic (initial) state – previously defined, traffic – wise and legal wise single meaning information state of the sign (including the zero state),*
- *Static state, non-changeable sign,*
- *Changeable state – content of the sign indicates one of the defined changes.*

Changeable traffic signs, according to the provisions of the Book of Rules, shall not differ greatly from the standard traffic signs by their content or measurements. There shall be no competition between the static signs or the changeable traffic signs with respect to the content and the level of recognition.

The speed limits, indicated on one information board, are basically intended for all traffic lanes. At interchanges, a difference in speed limits of 20 km/h is allowed between different traffic lanes on one information cross section.

During speed limits due to weather conditions, a warning sign shall be pointed out even after the initial warning sign. In the area of traffic jams only information sign 125 (traffic jam) is needed. When the visibility is less than 50 m, a change in the speed limit is possible to 40 km/h.

14.4 PRELIMINARY TESTING

Testing of the adequacy of material is performed according to the ARDM or EN requirements (paint for thin layer road markings)

14.5 CONTROL TESTING

This testing is carried out by the Contractor in order to prove the obtained quality of material.

The control testing consists of:

- *Testing of the thickness of wet and dry film – without glass globules - by sample taking at every 5 000 m (separately for central, border and other markings), all in conformity with the EN standards,*
- *Testing of markings with regard to traffic and technical characteristics (durability, day and night visibility, slipperiness) and adequate material properties , all in conformity with EN standards,*
- *Testing of resistance of material used for markings with regard to freezing, salt and temperatures of 80 ºC.*

14.6 AUDIT TESTING

This testing is carried out by the Employer in order to prove the obtained quality of material. Audit testing consists of:

- *Testing of thickness of dry film (without the glass globules) by sample taking at sample plates at every 20 000 m (separately for central, border and other markings) all in conformity with EN standards,*
- *Testing of resistance to slipperiness of dry film markings at every 10 000 m, in conformity with EN standards,*
- *Testing of day and night visibility and the position of colour co-ordinates in the dry film spectral diagram of markings at every 5 000 m, in conformity with EN 1436/97 and EN 1436:2001 en, standards,*
- *Visual check of the dry film state of the marking and possible faults (damage, wrinkling, cracking, pealing, stickiness and dirt).*Calculation of work

road markings are calculated as follows:

- *solid and broken white and yellow lines, per length of markings (m),*
- *stop line, inclined and border lines, per length of markings (m),*
- *pedestrian crossing, arrows per piece of marking (pc),*
- *traffic direction surfaces, per surface area of marking (m^2),*
- *parking surfaces and special purpose surfaces, as well as longitudinal markings on structures along the road edge, per length of executed marking (m).*

The price includes work, material, transport and all other needed for completion of work, including necessary quality control testing of material and executed work.

14.7 ROAD MARKINGS ALONG THE ROAD

Road markings along the road are lines marked parallel to the road centreline and thoroughly define the manner in which the road surfaces are used.

Road markings along the road are:

- *solid line,*
- *broken line*
- *double line*

14.8 ROAD MARKINGS ACROSS THE ROAD

These markings are:

- *Stop lines,*
- *Inclined and border lines,*
- *Pedestrian crossings*
- *Pedal - cyclist route crossing,*

14.9 OTHER ROAD MARKINGS

Other road markings include arrows, traffic directing surfaces, direction lines, signboards, marking of special purpose traffic surfaces, marking of parking places and longitudinal markings on objects along the road edge.

Paint or material used for road markings shall be of quality that does not significantly change the adhesion of the road.

road markings shall not be higher than 0,6 cm above the road level, and if metallic heads are used as road marking, they shall not be higher than 1,5 cm above the road level.

14.10 ROAD FURNITURE FOR MARKING OF ROAD EDGE

14.10.1 MARKER POSTS AND OTHER MARKINGS

Description of work

The work includes supply of marker posts and other road edge markings according to the accepted type, placing of posts into concrete, digging into ground, fixing on structures, transport of material and fixing of road shoulder or central reserve, i.e. structure on which the marking is placed after installation, all in

accordance with the EN and ARDM standard, the Book of Rules on traffic signs, road furniture and road markings", and other standards.

The work must be carried out in accordance with the design, appropriate regulations, Quality Control and Quality Assurance Program (QCQAP), Construction Management Design (CMD), Supervising Engineer's requirements, and these GTR.

14.10.2 MANUFACTURE

Marker posts and other road shoulder markings shall be made of material with such characteristics that, in case of collision with a vehicle, damage to the vehicle shall be minimum and it will not effect the vehicle stability.

Certificates on the quality of used material for marker posts and other markings shall be provided by the Contractor and original documents shall be given to the supervising engineer.

14.10.3 CALCULATION OF WORK

Placing of marker posts shall be calculated per piece of installed post. Payment shall be done according to the contracted unit prices which include supply and installation of marker posts, concrete foundation included, other markings, transport of material and fixing of road shoulders.

14.10.4 MARKER POSTS ON OPEN ROAD SECTIONS

Marker posts shall be placed in concrete foundation, minimum C20/25 (MB 25), or dug into ground, fixed by anchors which are supplied with the marker posts. Distance of the marker post from the road edge is at least 50 cm, at most 90 cm, marker post height is 90 cm from the road surface.

Roads where the shoulder is only 50 cm wide, marker posts are placed on the external shoulder edge. In order to reach the visual continuity, marker posts are placed in cuts, along the external gutter edge.

Distance between the marker posts along the road depends primarily on local visibility conditions and the road ground plan elements. It is defined by the design according to the conditions from ARDM or EN. On straight road sections, the maximum distance between marker posts is 50 cm.

14.10.5 MARKER POSTS IN TUNNELS

Marker posts for tunnels mark the road edge in the tunnel. They are placed immediately along the internal shoulder edge and fixed by anchors (screw anchors) which are supplied with marker posts.

Maximum distance between marker posts in the tunnel is 25 m.

14.10.6 OTHER ROAD EDGE MARKINGS

At places where installation of marker posts is not possible, other reflecting markings are placed (catadiopters, reflecting foil etc.).

14.11 TRAFFIC BARRIERS

14.11.1 STEEL BARRIERS

Description of work

Steel barrier is a technical safety barrier whose purpose is to prevent sliding out of vehicles from the road, i.e. holding the vehicles that have strayed of the road.

The work includes supply, transport, mounting of traffic barrier according to design and according to authorized classification.

The work must be carried out in accordance with the design, appropriate regulations, Quality Control and Quality Assurance Program (QCQAP), Construction Management Design (CMD), Supervising Engineer's requirements, and these GTR.

14.11.2 MANUFACTURE

Steel barrier shall be of such construction that a vehicle can not smash through it or run over it. Upon collision into the traffic barrier, the vehicle must not be bounced back onto the traffic lane. The transverse displacement of the traffic barrier must be as large as possible, depending on the free space between the railing and the danger zone. The damage on the vehicle upon collision into the traffic barrier must be minimal. The structure of the traffic barrier shall be such that its elements can be quickly and easily replaced upon damage.

Steel barrier according to type can be:

- *Single barrier (SGR)*
- *Double barrier (DGR)*
- *Single spaced barrier (SSGR)*
- *Double spaced barrier (DSGR)*
- *Single spaced barrier on structure (SSGRS)*
- *Double spaced barrier on structure (DSGRS)*

The steel barrier shields are fixed directly on the posts by screws, or by means of spacer elements.

The posts are driven into the ground up to the necessary depth or screwed on the already concreted anchors with a foundation slab, i.e. fastened into the concrete by screws and screw anchors.

The shields are installed in such a manner that, looking in the direction of traffic, the end of the previous shield is covered by the beginning of the following shield.

When the steel barrier crosses the structure, the installation of posts and shields starts from the centre of the structure forward and backward, n order to avoid cutting the

edges of the shields and boring new holes in the shield, i.e. in order keep the defined distance between the posts.

If there is insufficient space for installation of posts, the spacer is fixed into the vertical walls on the already placed anchors by means of screws, i.e. by screws and screw anchors.

Parts of the diagonal ends which shall be placed into the ground – are coated by adequate bitumen insulation coating.

Parts of the barrier shall be transported in such a manner that will avoid damage to the anti-corrosive coating. Shields shall be transported in bands and protection shall be placed between each part. Posts and spacers shall be bulked.

14.11.3 QUALITY CONTROL

Materials for barriers and its component parts are defined by standards, and the manufacturer shall, at his expense, provide certificates of quality for all materials. The original certificates of quality shall be submitted to the supervising engineer.

Quality control of material and anti-corrosion protection (galvanizing) of the structure steel elements shall be according to the respective GTC provisions.

14.11.4 CALCULATION OF WORK

Installation of barriers shall be calculated according to type and length (m) of railing, completely finished and according to the contracted price, all works, supply, excavation, concreting and other material included, as well as all other works relating to the installation of barriers.

14.12 CONCRETE PARAPET

Description of work

Concrete parapet implies a type of technical safety road equipment for prevention of sliding out of vehicles from the road, i.e. holding the vehicles that have strayed of the road.

Structure and shape of the parapet shall be such that it prevents smashing through or running over it and that it holds and gradually stops the vehicle in the area outside the danger zone. Damage to the vehicle due to collision into the parapet shall be minimal.

Structure of the parapet shall be such that the damage incurred can be easily and quickly repaired.

The parapet shall be constructed exactly according to given geometrical elements since the safety factor of the railing directly depends on the shape and its own mass. Shape of the concrete parapet must be tested.

The work includes all necessary preliminary works, e.g. base preparation, foundation excavation, supply, transport and installation of material as well as Manufacture and mounting of the parapet, all in accordance with the valid EN standards for this kind of work, while, in case of prefabricated elements, according to the GTC, this also includes certificates on quality of cement, aggregates and ready mixed concrete as well as all quality control testing. Concrete parapets shall be made of concrete class C40/45 (min. MB 40).

The work shall be performed in accordance with the design, regulations and quality assurance and control program (QAACP), the construction – management design (CMD), the supervising engineer's requirements and these GTC.

14.12.1 MANUFACTURE

There are several ways to make a guard rail.

Mechanical means of concrete parapet construction in situ.

For this kind of construction a special electronic controlled machine is used.

The guard rail is constructed on a previously prepared foundation or stabilised base, cross-fall 0.0%

If planned according to design, the reinforcement is placed according to valid standards and regulations for that kind of work. .

Prefabricated construction of concrete parapet from industrially made, or prefabricated elements.

Concrete elements are produced in specialized plants. Guard rail elements are 2 m, 3 m long, or more, and are reinforced due to transport, loading and mounting efficiency. Quantity and means of reinforcement must be proven by structural analysis for individual lengths of elements.

The connection of elements must be simple, by means of gouge and wedge, at least at two places on each connection.

Prefabricated guard rails shall be placed at places along the road where a temporary need exists for such road furniture. Prefabricated elements shall be placed on previously precisely levelled and prepared concrete base (foundation).

Irrespective of the means of manufacture of concrete railing, concrete prepared in concrete production plants must be used, and transported to the place of pouring in a special vehicle. The quality of concrete must be in accordance with the conditions and standards for concrete used in road construction. This means that the concrete shall have the strength defined by the design, resistance to salt as well as resistance to the mutual influence of salt and freezing, all according to the GTC.

14.12.2 QUALITY CONTROL

Materials used for production of concrete parapets are defined by standards, and for all materials used, the contractor shall provide quality certificates at his expense. Original certificates shall be given to the supervising engineer.

14.12.3 CALCULATION OF WORK

Production and installation of concrete parapets is calculated per length (m) of completed railing and according to the contracted price which includes all work and material, e.g. preparation of base, foundation concreting, supply and transport of all needed material, placing of concrete or prefabricated elements, finishing works e.g.curing and protection of concrete, as well as all other work connected to the production and installation of guard railing.

14.13 SAFETY CHAIN-LINK FENCES

Description of work

This includes supply, transport and installation of complete safety chain link fences of different types, according to the design. The fence consist of posts, wire net, wire hooks for anchoring bolts for securing the railing against falling.

The work shall be done according to the design, regulations, quality assurance and control program (QAACP), the construction-management program (CMP), requirements of the supervising engineer, respective Albanian standards and these GTC.

14.13.1 MANUFACTURE

Excavation of foundations for posts is done by drills, depth up to 85 cm. After installation of posts, the remaining hole is filled by concrete and the use of the excavated earth material is already planned.

Wire net is fixed to the posts by wire, and by hooks into the soil. At places where the fence changes direction and where danger of collapse exists, it should be secured by anchors and struts.

According to height, the fence can be:

- *low - up to 1,6 m height*
- *high – from 1,6 to 2 m height*

According to material used, the fence can be:

- *steel – galvanized or plastic coated*
- *made of polymer fibres*

After installation of safety fences, the contractor shall remove from the construction site all waste material, according to the agreement with the supervising engineer.

14.13.2 QUALITY CONTROL

The contractor shall provide certificates of quality for all materials used for the safety fence and submit the originals to the supervising engineer. The anti corrosion quality control is done according to the respective regulations of these GTC.

14.13.3 CALCULATION OF WORK

This work is measured per meter (m) of installed safety fence measured from the farthest edges of the poles, and is paid per unit price for one meter of installed fence according to type and height.

Unit price includes supply and installation of material, transport and all other work and material needed to complete the work.

14.14 HEDGE

Description of work

This work includes supply and transport of seedlings and fertilisers, excavation of trenches, removal of unfertile soil, filling of trenches with fertile soil and fertiliser, cutting of roots and seedling branches, planting and landscaping after planting. Works are done according to design, instructions of the seedling grower and these GTC.

14.14.1 MANUFACTURE

At places planed according to the landscaping design, a trench 60 cm wide and 50 cm deep is excavated. Excavated material, if fertile, shall be used for back-filling after planting. If the material is not fertile, it shall be removed to the dumping site or spread along the trench (in agreement with the supervising engineer). For back-filling of trenches, fertile soil shall be used.

Ten litres of stable manure is used for one meter of trench. Roots and branches shall be cut before planting.

For a high quality hedge two rows of seedlings are planted, according to the design and manufacturer's instructions.

The work includes cutting to shape and single watering. After planting all waste material shall be removed and surface around the hedge improved.

14.14.2 CALCULATION OF WORK

The work is measured according to the length (m) of planted hedge. The price includes supply, transport and cultivation of seedlings, all necessary work, supply and transport of material (manure, soil) as well as everything else needed for completion of the job.

14.15 OTHER ROAD FURNITURE

Description of work

The work includes supply, transport and installation of the designed equipment for traffic regulation and road mirrors.

The work shall be in accordance with the design, regulations, quality assurance and control program (QAACP), construction -management design (CMD) supervising engineers' requirements and these GTC.

14.15.1 MANUFACTURE

Traffic mirrors are mounted on posts with concrete foundation, or are placed on already constructed structures by means of cantilever beams (buildings, fences, walls etc.) on places where the visibility at intersections is inadequate.

14.15.2 QUALITY CONTROL

Quality control of Manufacture includes the control of materials used with respect to the design requirements, in accordance with the provisions, laws and these GTC for used materials and structures.

The contractor shall provide certificates of quality for all materials used and submit the originals to the supervising engineer. Quality control of used materials (concrete, stone, plastic, aluminium) shall be done according to respective GTC provisions.

14.15.3 CALCULATION OF WORK

The work is calculated and measured per piece of mounted mirrors, i.e. per piece of element for traffic regulation.

14.16 TRAFFIC SIGNS BEARING STRUCTURES

Description of work

The load – bearing structures are mounted over multiple lane highways for installation of traffic signs for traffic re-direction or classification, or other information signs important for safe and uninterrupted traffic flow.

Classification of load - bearing structures

The traffic signs structures are divided according to their function, performance and span length, i.e. length of structure leg.

- *Direction signs gantry* *type "PP 1550"*
- *Traffic lights gantry* *type "PP 1400"*
- *Cantilever – direction post* *type "KPS 900"*

- *Cantilever-traffic lights post* *type "KSS 600"*
- *Traffic lights post* *type "SS 300"*

14.16.1 MANUFACTURE

Traffic signs load bearing structures shall be anti-corrosion protected by hot galvanizing. Anti – corrosion protection shall be done in accordance with the "Book of Rules on technical measures and requirements for anti-corrosion protection of steel structures (O.G. no: 32/70).

Traffic signs bearing structures consist of steel posts and steel transverse bars.

The overhead clearance of the gantry with traffic sign boards is minimum 5,0 m above the road.

Gantry posts are rectangular pipes, dimension as follows:

- *For type "PP 1550"* *350• 250• 8 mm*
- *For type "PP 1400"* *350• 250• 8 mm*
- *For type "KPS 900"* *250• 350• 8 mm*

Anchor bolts, connecting the post with the foundation pole for type "PP 1550", type "PP 1400" and type "PP 900" are M 30.

Steel material used for poles and bars is hot rolled tin material ÈN24-B1-È.0361. The gantry steel structure shall be done according to the "Book of Rules on technical standards for load-bearing steel structures" (O.G. no: 42/68).

The mounting of the structure shall be according to the "Book of Rules on technical measures and requirements for steel structure mounting" (O.G. no: 29/70) and according to the "Technical regulations for welded steel structures in load-bearing steel structures" (O.G. no: 17/87)

Foundation excavation for traffic signs bearing structures (gantries and posts) shall be done according to the design, i.e. according to the geo-technical report. Foundations are bearing concrete blocks that transfer all structural influences to the ground through their own weight.

Excavation of foundation is 1,5 m deep for all posts except for type "SS 300", where the depth is 1,0 m. The concrete grade for gantry and post foundations is MB 30 (minimum 350 kg of cement per 1 m^3 of concrete).

All gantries shall have an inspection passage for maintenance of signs and lighting. Changeable roadside signals of larger size shall be mounted on steel hot rolled profiles. The number and the profile dimension shall be defined by structural analysis.

All structures shall be designed for II. and III. climatic zone according to valid laws, Book of Rules and standards.

Mounting and Manufacture of load bearing structured for traffic signs shall be done in accordance with European standard EN 12 8991.

Material for signs and posts is defined by standards or the "Book of Rules on traffic signs, road furniture and road markings".

14.17 ELECTRICAL WORKS

14.17.1 GENERAL FOR LUMINAIRES

- Install power: 105-115 W
- Lighting appliances to be intended for street lighting, residential, sidewalks, pedestrian crossing etc.
- Allows to reduce the luminous flux by at least 80% of the rated flow in increments of at least 1%
- DALI protocol communication, on power wires, so that is not necessary to place additional cables or costs related to communication
- Dimming procedure shall be done online in groups from 1 to 150 pcs of luminaires. Based on light manufacture technology
- System must provide consumption reports are available on a daily, monthly, quarterly, annually or on a 5-year basis on overall cabinet basis or single luminaire base.
- Controlling of on/off time based on astronomical clock, photocell or specific time requested from the owner.
- System must provide consumption reports are available on a daily, monthly, quarterly, annually or on a 5-year basis on overall cabinet basis
- Different switch schedules can be programmed and assigned to specific dates long in advance
- Additional features include fault reporting like above and below threshold alarms of current and voltage, cable breakages, streetlamp failures, leakages detected etc.
- Electrical supply 230 V/50 Hz
- Rated voltage 220-240 V
- Nominal frequency 50 Hz
- Power Factor higher than 0.96
- Operating temperature: - 35 °C ~ + 45 °C.
- Lighting efficiency minimum 135 lm / W
- Protection degree IP 66 (dust penetration-protected, jet proof) IEC 60598-1 :2008
- Electrical insulation IEC standard class II
- Impact resistance minimum IK08 (5 J vandal protection) as per standard IEC 62262
- Luminous flux tolerance ± 7 %
- Color temperature T = 4000 K ± 350 K at of the life, neutral white
- Luminaire light beam spread medium depend on project request
- The mounting system will allow installation on the arm or at the top of the pole and adjustable inclination 48/60 mm diameter 0, 5, 10 & 15 degree
- Ra color rendering index ≥70
- ENEC, CE, or similar certifications must be presented
- Marine salt protection paint
- Surge protection: 6 kV on common or differential mode or higher
- The housing material made from aluminum die cast
- Optic material from Polycarbonate
- Optical cover tempered glass
- Painting based on standard ISO 2808-2007 & ISO 19840
- Lighting guarantee 36 months
- Push in connector for connection 5 - pole

14.17.2 ELECTRICAL CABINE

Will be installed near to main distribution panel for tunnel lighting.

Place will be decided during construction phase in collaboration with the main contractor.
Electrical cabinet should be equipped with all necessary products to be able to be connected to main SCADA control center of the tunnel or be in grade to be controlled online independently from the control center.

Cabinet should be at least 850x1000 mm. Powered from three phase plus neutral system with cable 4x25mm^2. The luminaries will be feeder from 5x16 mm^2 copper cables.
Cabinet should be waterproof IP 67 in plastic or metallic materials.

Schematic view is given on table below

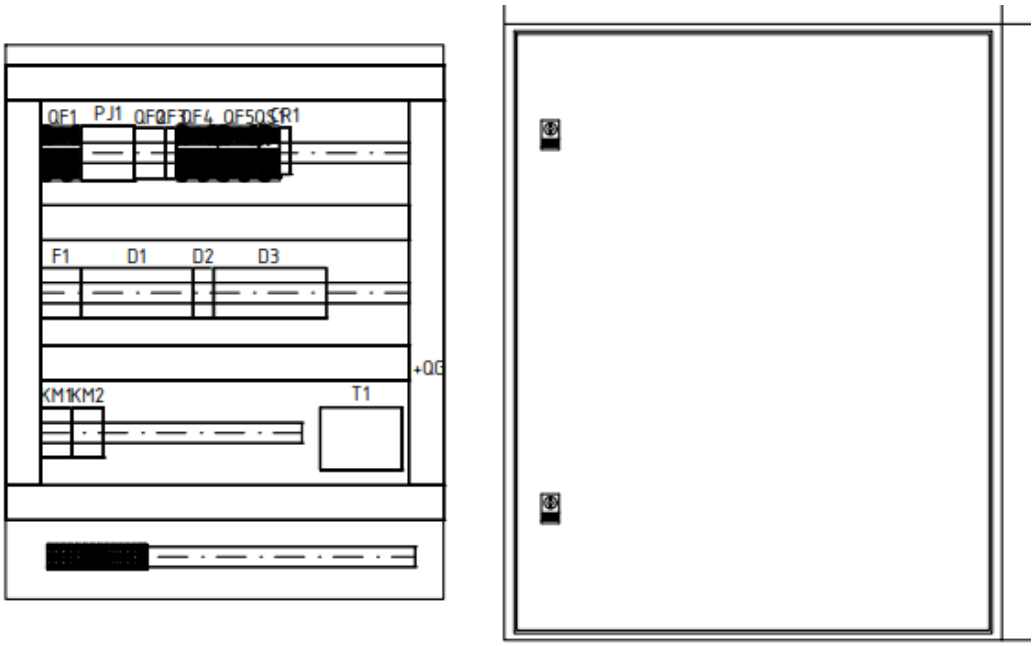

Schematic type is given in two design below.
Design are only indicative, and each producer is free to offer other functional models.

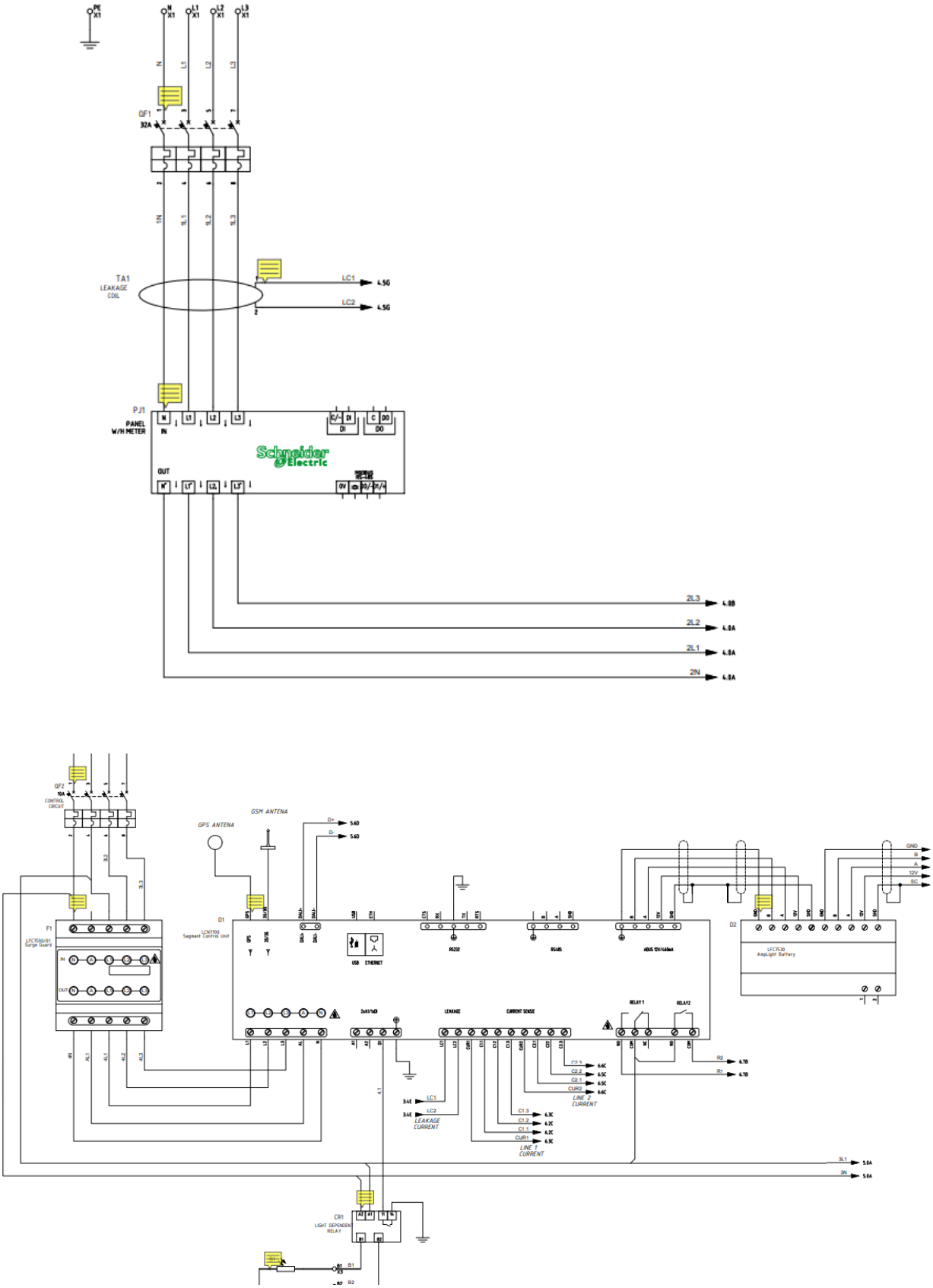

Figure 21 - Electrical Scheme

14.17.3 CABLES

Cables should be flexible conductors, non-rigid, fire resistant, with two layers of insulation and suitable for installations without auxiliary support.
Will be used for outdoor and indoor installations and in humid environments. Suitable for aerial installations, in pipes or ducts, masonry, metal structures, cable lines.
Cables should be type FG7R / FG7OR 0,6/1kV or similar
An indicative photo of cable is given below.

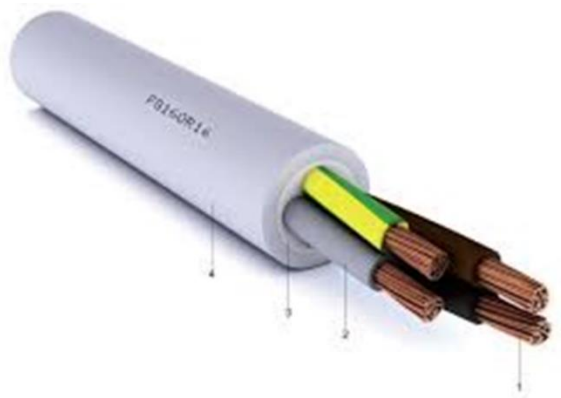

Standard voltage U0 / U: 0.6 / 1 kV
Maximum voltage Um: 1.2 kV
Maximum working temperature: 900 C
Conductors and cables to be used must have referred to the required standards and must have been produced no more than 12 months before the date of delivery of the goods.
Cables will be installed underground on depth of 80 cm inside the double layer flexible corrugated pipes.

14.17.4 POLES

Installation of poles will be done on the side of road as per design.
Poles should be 8 meter above the ground and in conical form.
This type of poles is necessary for the installation on the bridge and from architectural point of view to be in line with the terrain and tunnel.

Indicative view of type of pole is given to the picture below.

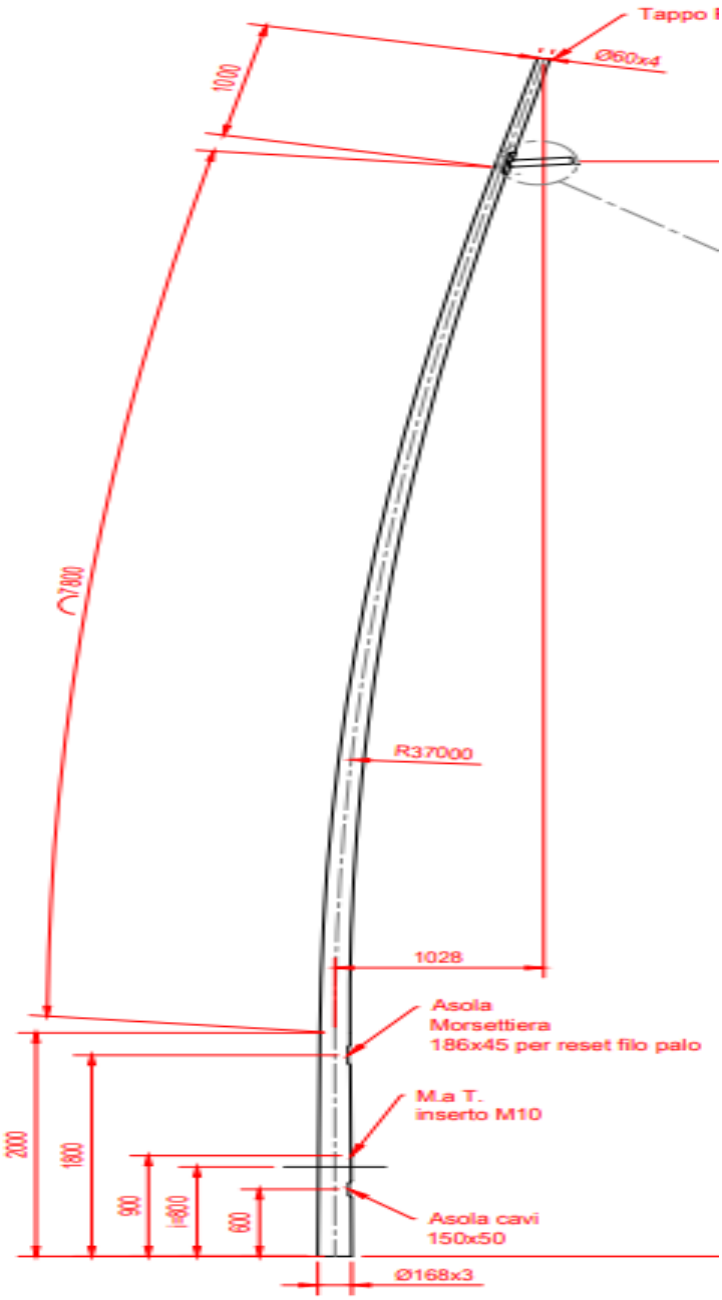

Figure 22 - Pole Example

Poles must be hot deep galvanized as per standard UNI EN ISO 1461.
Material of pole should be steel grade S235JR that is made in accordance with the EN 10025-2 standard or similar.

In total are 24 Led luminaires.
Based on the possibility of dimming and reducing the energy consumption we have assumed a different time schedule for each luminary that consist
30% of the time used on maximum level luminance of 100%
35% of the time used on level luminance of 70%
35% of the time used on level luminance of 50%

14.17.5 BRIDGE ILLUMINATION

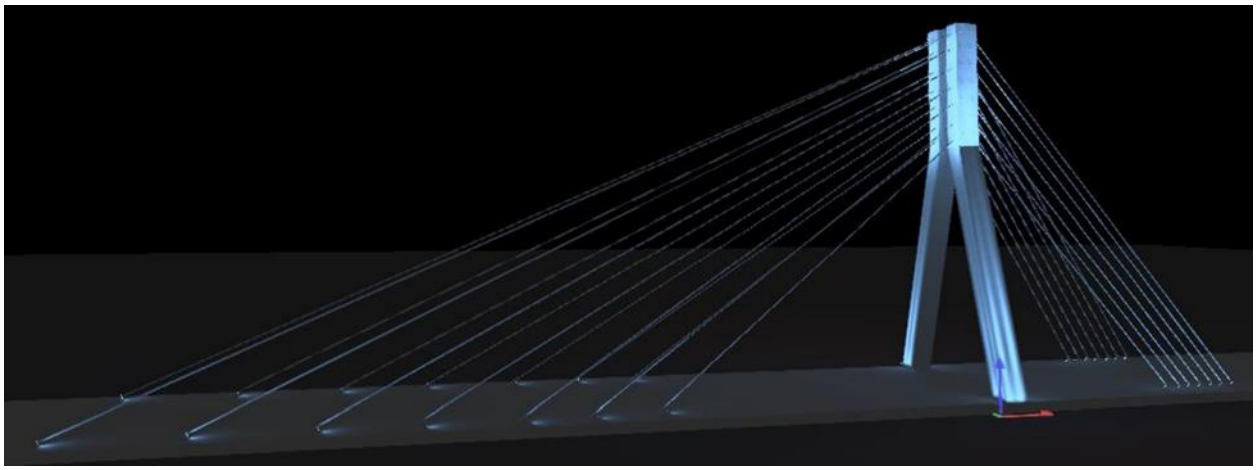

14.17.5.1 MODEL 1:

Main specifications are given below
Led power 130 W,
Efficiency higher than 41 lumen per watt
General Information Beam Angle 5° (Native), 8°to 13°
Input Voltage UL/CE 100 to 277 VAC,
auto-ranging, 50/60 Hz
CQC 100 to 240 VAC, 50/60 Hz
Housing Material Diecast aluminum,
Powder-coated finish
Lens Clear tempered glass
Mechanical Impact IK07
Approbations UL/cUL, FCC Class A,
CE, PSE, CQC, C-Tick
Environment Dry/Damp/Wet Location,
IP66
Weight approximately 20 to 25 kg
Dimensions approximately UL/CE 350 x 733 x 211 mm (13.75 x 28.9 x 8.3 in) CQC 350 x 733 x 196 mm (13.75 x 28.9 x 7.7 in)

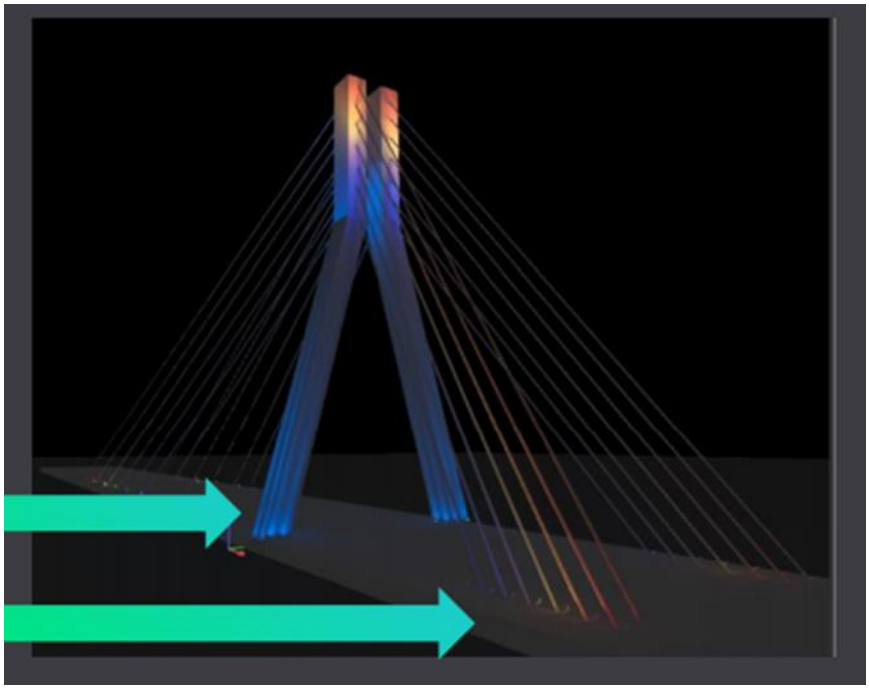

14.17.5.2 MODEL 2:

The lighting system should guaranty multiple fixture lengths, beam angles, output levels, and power consumption levels support a large range of façade or surface illumination applications. Low-profile housing, connectorized cabling, a universal power input range, and direct line voltage operation.
Proposed luminaires are on different length based on producer type.
Main specifications are given below
Beam Angle 9° x 9°
LED Channels Red/Green/Blue
Lumens 500 lm
Efficiency 20 lm/watt
Input Voltage 100 to 277 VAC, auto-ranging, 50/60 Hz
Temperature Ranges -40 to 50 °C (-40 to 122 °F) Operating mode
Housing Material Extruded anodized aluminium
Lens Clear UV-protected polycarbonate
Luminaire Connections Integral male/female waterproof connectors
Specs Mounting Title Multi-positional, constant torque locking hinges
Vibration Resistance Complies with ANSI C136.31, 3G
Mechanical Impact IK10
Humidity 0 to 95%, non-condensing
Environment Dry/Damp/Wet Location, IP66
Dimensions 68 x 305 x 72 mm (approximately)
Weight max 1.5 kg
Guaranty 3 years

14.17.5.3 MODEL 3:

Viewing Angles 125°, 150°
Lumens 501 to 774
LED Channels Red/Green/Blue
Environment Dry/Damp/Wet Location, IP66
Applications Direct View
Input Voltage
100 to 240 VAC, auto-ranging, 50/60 Hz
Power Consumption approximately 25 W
Weight max 1.5 kg Clear Flat Lens
Housing Material Die-cast aluminum with silver gray powder-coated finish
Approbations UL/cUL, FCC Class A, CE

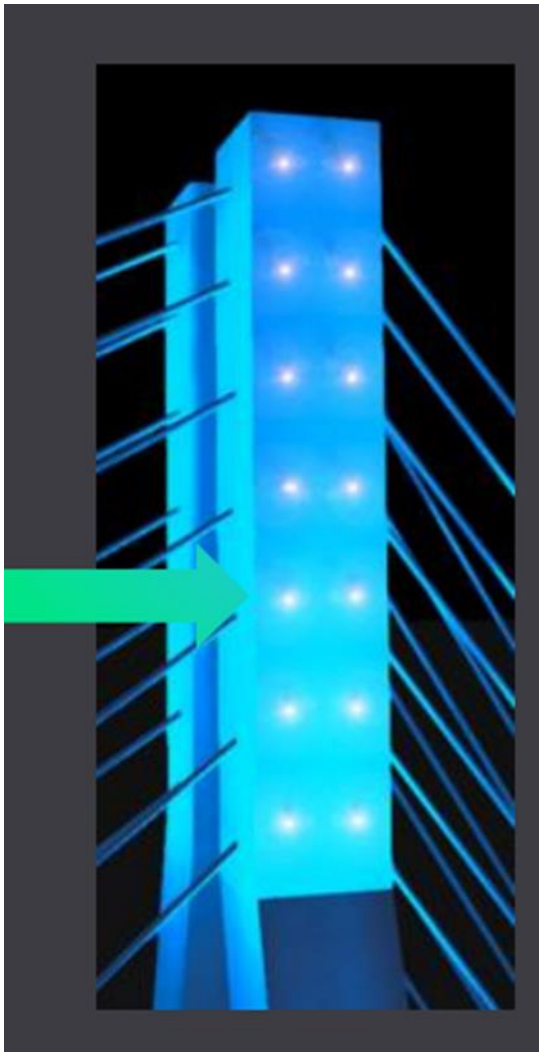

14.18 STANDARDS

EN 12675:2001 en	Traffic signal controllers. Functional safety requirements.
EN 12676-1:2000en	Anti-glares system for roads. Part 1: Performance and characteristics.
EN 12676-2:2000 en	Anti-glare system for roads. Part 2. Testing methods.
EN 1317-1:2001 en	Road restraint system. Part 1. Terminology and general criteria for test methods.
EN 1317-2:2001 en	Road restraint system. Part 2: Performance classes, impact test acceptance criteria and test methods for safety barriers.
EN 1317-3:2001 en	Road restraint system: Part 3. Performance classes, impact test acceptance criteria and test methods for crash cushions
EN 1436:2001 en	Road marking materials. Performance characteristics for road users.
EN 1436-1:2001 en	Road marking materials. Retro-reflecting road studs. Part 1: Initial performance requirements

EN 1436-2:2001 en	Road marking materials. Retro-reflecting road studs. Part 2: Road test performance specifications
EN 1790:2000 en	Road marking materials. Pre-formed road markings.
EN 1794-1:2001 en acoustic	Road traffic noise reduction devices. Non-performance. Part 1. Mechanical performance and stability requirements.
EN 1794-2:2001 en acoustic	Road traffic noise reduction devices. Non-performance. Part 2 General safety requirements and environmental protection requirements.
EN 1824:2000 en	Road marking materials. Road trials.
EN 1871:2000 en	Road marking materials. Physical properties.
ENV 13563:2000 en	Traffic control equipment – vehicle detectors.
EN 12899-1	Traffic signs – fixed, vertical. Part 1: Fixed signs.
EN 12899-2	Road furniture. Fixed, vertical traffic signs. Part 2: Illuminated traffic bollards.
EN 13422	Vertical road furniture. Portable traffic signs. Cones and cylinders.

14.18.1 SYSTEM COMPONENTS

System should include DMX and Ethernet controllers, video servers, controller accessories, and power/data supplies integrate seamlessly with LED luminaires in bridge installation.
Main components are:

14.18.2 Light System Manager

Easy to use—Featuring Ethernet-based control and automatic lighting system discovery, Light System Manager dramatically simplifies installation.
• Hardware support for medium and large environments—Light System Engine hardware processes simultaneous light output data for up to 500 individually controllable LED nodes, depending on configuration.

• Native control of multi-channel luminaires—Light System Manager supports luminaires with up to 12 LED channels in either 8-bit mode or 16-bit mode. That means you have greater control of the full gamut of lights
• Improved reliability—Solid-state drives reduce the number of moving parts to enhance the reliability of the Light System Engine.
• Slim profile and flexible mounting options—Integrated mounting tabs allow installation overhead, on vertical surfaces, or on moving architectural or entertainment features.
• Automate show playback—Set calendar events to automatically trigger show playback based on a specific date or an astronomical event, such as sunrise or sunset Web interface access—Set event triggering, create show schedules, and easily select point-and-click static color scenes using an online web interface. The web interface supports multiple online users with activity logging for each user account.
• Versatile zone usage—Configure and control multiple playback zones, each with unique light show assignments. Light System Manager allows zone control of both indoor and outdoor luminaires within a single installation.
• Dual configurable network ports—Two network ports support integration into existing network environments, while maintaining connectivity to a separate dedicated lighting network.
• Active Site integration—Active Site is the first ever cloud hosted connected lighting system for architectural LED lighting installations. Active Site allows you to remotely monitor, manage, and maintain an installation site from anywhere in the world, using a secure web connection.

Input Voltage 100 to 240 VAC, auto-switching
Power Consumption 180 W maximum
Network Data Ethernet protocol via standard Ethernet switch

14.18.3 POWER DATA SUPPLY

• Easy installation — Accessible, clearly labeled terminal block connectors for DMX, Ethernet, line voltage, and luminaires make installation easy. Tethered cover with captive screws ensures convenient removal and replacement.
• Supports luminaires employing best engineering technology — efficiently, and accurately controls power output to LED lighting luminaires directly from line voltage. Data Enabler Pro merges line voltage and control data and delivers them to luminaires over a single cable, simplifying installation and lowering total system cost.

• On-board diagnostics — On-board indicator LEDs provide visual feedback for normal operation, Ethernet connection detection, and Ethernet and DMX data transmission.
• Full support for DMX and Ethernet — Provides inputs and outputs for both DMX and Ethernet, allowing to connect multiple Data Enabler Pro devices in series. Also provides an Ethernet output terminal for luminaries.
• Outdoor-rated for use in damp and wet environments — Data Enabler Pro offers superior leakage protection in a cast aluminum, IP66-rated enclosure.
• Multiple conduit entries — Data Enabler Pro conduit entries accommodate metric sizes of PG13 and PG21.
•Universal power input range — Data Enabler Pro automatically senses mains voltages ranging from 100 – 277 VAC and passes mains voltages through to all connected lights.
• Designed for maximum energy efficiency — consumes just 20 W maximum. Optional power-saving modes automatically cut power to attached lights when lights are off for a configurable number of minutes.

The system should include waterproof connectors and cables as per design of the contractor that will be the winner.
All materials and system should be form well known companies on the market with minimum three years guaranty.
The offer should include all the cost related to the control and online management system for three years.